Gondola Standby Power Generation RFP

Request for Proposal for Gondola Standby Power Generation

Purpose

The purpose of this request for proposal (RFP) is to engage the services of a contractor to provide the necessary engineering and experience to design and install a stand by power generation system capable of running the St. Sophia gondola station in the event of the loss of utility power for both short term and long term outages.

System Requirements

- Ability to handle full capacity starting and nominal loads
- Ability to handle full capacity regenerative load
- Expandable capabilities for future increases in capacity
- 24 hour minimum runtime before refueling
- Maximum sound attenuation
- Designed to run at an elevation of 10,540'
- Energy efficiency

Specific Responsibilities of Contractor:

- All expenses associated with site visits
- Coordinate with local power utility in order to determine appropriate size
- Coordinate with local gas utility to determine feasibility of dual fuel generation
- Provide TMV with physical size requirement for pad and enclosure
- Provide venting and exhaust requirements for any structure housing the generator station
- Determine feasibility of providing power to adjacent building / restaurant during periods of outages. This should be a separate specific cost line item
- Provide as an option, the cost to provide additional, above ground bulk fuel storage
- Provide all equipment and materials associated with the generation and distribution of standby power, including, but not limited to, generators, switch gear, paralleling equipment, load banks, fuel tanks, and wiring to existing service entrance

- Provide all labor associated with the installation of the equipment and materials including but not limited to those listed above
- Start-up assistance
- Contractor will specify each task in the above and explain the proposed approach to the task with specific steps to accomplishment
- Provide customary workers compensation for its employees and furnish proof of property damage and liability insurance if awarded contract as provided below
- Provide proof of current Town of Mountain Village Business licenses to perform contract work within Town limits if awarded contract

Specific Responsibilities of Town:

- Secure utility easements
- Reroute utilities as needed (water, sewer, power, communications)
- Run new natural gas service
- All permits and approvals associated with the project
- Modification forms required by the CPTSB
- Construction engineering oversight
- All costs associated with the design and construction of the pad and enclosure for generator station.
- Labor and materials to load test the system upon completion
- Provide forklift for contractors assistance
- Reveg all impacted areas

Inquiries:

This request for proposal (RFP) is issued by the Town of Mountain Village, Colorado. All proposals should be delivered to (email is preferred):

Town of Mountain Village
455 Mountain Village Blvd, Suite A
Mountain Village, Colorado 81435
Attention: Jim Loebe, Transit Director
jloebe@mtnvillage.org
(970) 729-3434

Informational Meeting and Q&A Period:

An optional project planning meeting will take place on Thursday, July 28th, 2016 at 9:00am. Contractors bidding on the project are required to attend. The meeting will begin at the address listed above.

There will be a Q&A period from the bid opening date and closing on August 5th, 2016 at 5pm. All Q&A topics will be posted on www.townofmountainvillage.com/RFP within two days of the end of the Q&A period.

Proposal Content:

Contractors are requested to present the following information:

- Experience and qualifications of the contractor
- References of like work
- Other information the contractor believes would assist the Town in its evaluation process
- Proposed cost broken out by specific line items
- Reason why contractor's proposed system would be the most beneficial to the Town
- Detailed narrative of how this meets the Town's objectives, including but not limited to the system requirements, how the system can be expanded and efficiencies.

Time Requirements:

The following dates are subject to change in accordance with agreements formulated at the planning meeting and any change in date shall be posted on www.townofmountainvillage.com/RFP as well as sent via email to all Contractors who attended the required site meeting:

Public notice in posted in paper of record and website	July 15th, 2016
RFP emailed to prospective bidders	July 15th, 2016
Q&A period ends	August 5th, 2016
Proposal deadline	August 19th, 2016 by 5 pm
Notification of bid selection	August 24th, 2016
Contract negotiated and signed	September 9th, 2016
Equipment delivery, staging, prep work	Post contract execution
Final tie-in	Oct 24th, 2016 – Nov7th, 2016
Project completion	November 14th, 2016

Insurance and Indemnity:

The contractor shall agree to indemnify and hold harmless the Town, its officers, employees, and insurers from any and all liability, claims, and demands, on account of injury, loss, or damage, including without limitation claims arising from bodily injury, personal injury, sickness, disease, death, property loss or damage, or any other loss of any kind whatsoever, which arise out of or are in any manner connected with the services to be performed by contractor, if such injury, loss or damage is caused by the negligent act , omission, or willful misconduct of the contractor, any subcontractor, or any officer, employee, representative, or agent of the contractor or of any subcontractor. The contractor agrees to investigate, handle, respond to, and to provide defense for and defend against, any such liability, claims, or demands at the sole expense of the Contractor. The contractor also agrees to bear all other costs and expenses related thereto, including court costs and attorney fees, whether or not any such liability, claims, or demands alleged are groundless, false, or fraudulent.

The contractor shall agree to procure and maintain, at its own cost, a policy or policies of insurance sufficient to insure against all liability, claims, demands, and other obligations

assumed by the contractor. Such insurance shall be in addition to any other insurance requirements imposed by contract or by law. The contractor shall not be relieved of any liability, claims, demands, or other obligations by reason of its failure to procure or maintain insurance in sufficient amounts, durations, or types.

Contractor shall procure and maintain, and shall cause any subcontractor of the contractor to procure and maintain, the minimum insurance coverage listed below. Such coverage shall be procured and maintained with forms and insurers acceptable to the Town. All coverage shall be continuously maintained to cover all liabilities, claims, demands, and other obligations assumed by the contractor. In the case of any claims-made on the policy, the necessary retroactive dates and extended reporting periods shall be procured to maintain such continuous coverage.

Worker's Compensation. contractor shall provide Worker's Compensation insurance to cover obligations imposed by applicable laws for any employee engaged in the performance of work under this contract, and Employer's Liability contractor shall provide Worker's Compensation insurance to cover obligations imposed by applicable insurance with minimum limits of FIVE HUNDRED THOUSAND DOLLARS ($500,000) each accident, FIVE HUNDRED THOUSAND ($500,000) disease-policy limit, and FIVE HUNDRED THOUSAND DOLLARS disease-each employee. Evidence of qualified self-insured status may be substituted for the Workmen's Compensation requirements of this paragraph.

General Liability. contractor shall provide General Liability insurance with the minimum combined single limits of ONE MILLION DOLLARS ($1,000,000) and TWO MILLION DOLLARS ($2,000,000) aggregate. The policy shall be applicable to all premises, services and operations. The policy shall include coverage for bodily injury, broad form property damage (including completed operations), personal injury (including coverage for contractual and employee acts), blanket contractual, independent contractors, products, and completed operations. The policy shall include coverage for explosion, collapse, and underground hazards. The policy shall contain a severability of interests provision.

Evaluation Process:

The Town will judge the merits of proposals received in accordance with the criteria discussed below. The bidder is responsible for providing all information requested in this RFP and failure to do so may result in disqualification of the proposal. During the evaluation process, the Town may contact the interested parties to discuss any items that may need further clarification. The award shall be made to the most responsive, responsible bidder, not necessarily the lowest costs of the project.

Criteria:

1. The contractor is deemed to be reputable in the industry for the work to be performed
2. The adequacy and completeness of the proposal in meeting the requirements and needs of the Town
3. The experience of the contractor
4. The proposed cost of the project

Right to Reject:

The Town reserves the right to reject any or all proposals and accepts no responsibility for the cost of proposal preparation.

RFP Q&A

Gondola Standby Power Generation Q and A

8/12/2016

Question: Will engineer stamped/ signed construction documents be required prior to start of construction?
Answer: No. We will require "As Built" drawings to be stamped after project completion.

Question: Is there any information available regarding the regenerative capacity of the existing equipment?
Answer: Yes. See the attachments for "Dynamic Test Results" for specific regenerative load of drives.

Question: What is the desired percentage of future/spare capacity in the system?
Answer: The system needs to be designed to take into consideration the possibility of adding more generators in the future. Currently, the size and electrical capacity is unknown for any future changes.

Question: Does the owner have any existing gondola building drawings that can be scanned and made available?
Answer: Yes, there will be building drawings available.

Question: Will architectural/structural drawings be required for the new generator building? If required, will these be provided under separate contract? Who will the building/pad designer be?
Answer: The Town of Mountain Village will be responsible for engineering/design/construction of pad and enclosure *after* the contract is awarded.

Question: Do you want us to cover the gas pipe (manifold to generator) or diesel tank (enough diesel to last 24 hours) for the generator?
Answer: No

Question: What size of truck can we get to the site?
Answer: No weight limit. Suggested maximum trailer length of 30ft. Mountain Village will assist with transport of equipment up the mountain. Supplier will be responsible for transferring equipment off of truck at the ski area maintenance shop and onto Mountain Village's rough terrain hauling trailer. Depending on weight of equipment, Mountain Village will unload and place equipment at generator site. Max load we are capable of handling is 10,000 lbs. Anything heavier than that will require a rough terrain crane to be supplied by contractor.

Question: What is the schedule for the project, start to finish?
Answer: To be determined. Ideally we would like the system fully functional by November 15th, 2016. However, we do understand the nature of this process could put us into the spring of 2017 for a completion date.

Question: Is there a power softener on the 2000 amp service? If so is it on the line or load side?
Answer: Each of the ACS800 drives has an active front end. The 6 "helper" drives have internal Class B EMC filters. The existing harmonic filter is turned off and will be removed this fall.

Question: Please confirm the ATS need to be manual start up?
Answer: We desire the generators to start manually and the transfer to be manual as well.

Question: Please confirm all feeder needs to be copper?
Answer: Yes.

Question: Please provide what tape of P.V. system we have, a battery bank or a feedback to SMPA.
Answer: 2 quantity of 10kVA systems, both are grid tie. NO batteries.

Question: Is the town going to waive the permit fee?
Answer: The town is responsible for all permit fees associated with this project. It is every contractor's responsibility to have and to operate under a TMV Business License. There is no requirement for a TMV business license to submit a proposal.

Question: Is there going to be a bid or performance bond, if so what is the rate?
Answer: TMV has not yet determined if there will be a performance bond. As a contingency, please include as a separate line item a 5% performance bond in your bid.

Question: Is a load test going to be required on the generators?
Answer: Yes, per CPTSB rules and regulations. TMV will cover all costs associated with the load test.

Question: Worst case gas supply for a Cummins Natural Gas solution needs to be 3 x 10,747 CFH (32,241 CFH total). Running pressure is 20" WC. Will the gas provider be able to provide this?
Answer: Please refer to the RFP – Contact information for Black Hills Energy was included with the bid sign in sheet.

Question: Submittal documentation for all motor loads & starting methods.
Answer: See Dynamic Test Results.

Question: Doppelmayr Gondola Sequence of Operation Documentation
Answer: Both sections start simultaneously with a 30 second acceleration time. 650kW peak demand for both 500hp motors combined. 40hp = 8kW peak each (quantity 4) ; 7.5hp = 1kW peak each (quantity 2)

Question: Town of Mountain Village will be responsible for moving/providing utility gas lines to pad location per generator equipment requirements.
Answer: Yes.

Question: Town of Mountain Village will provide pouring of concrete pad for generator equipment based on manufacturer's recommendation with gas line and electrical accesses necessary in the pad.
Answer: Yes.

Question: Town of Mountain Village will verify the road into the planned generator site is capable of handling large cranes and semi-tractor trailer trucks loaded with equipment. Access will allow for necessary unloading area and turn around space.
Answer: There is no weight limit. Suggested maximum trailer length of 30ft.

Question: What is the known maximum KVA of the regenerative power produced by the Gondola at any one time?
Answer: see Dynamic Test Results

Question: What is the typical duration of that maximum regen?
Answer: About 5 seconds

Question: Please provide specifics on the VFD's for each motor, i.e., 6 pulse; 6 pulse filtered; 12 pulse; 12 pulse filtered; 18 pulse; 24 pulse or Active Frond End IGBT. Any and all information will be helpful!
Answer: The main drives (ABB ACS800) are Active Front End IGBT. The "helper" drives for the conveyors have class B EMC filters, 6 pulse.

Question: Please confirm the motor size and starting methods of each motor. Please confirm all motors will start at the same time when the utility fails. If there is a sequence of operation, please provide.
Answer: 2 each at 500hp, 4 each at 40hp, 2 each at 7.5 hp. All motors start at the same time.

DYNAMIC TEST PROCEDURE

FOR

GONDOLA SECTION 1
Modification Project Number SAA0002401

AT

MOUNTAIN VILLAGE, CO

TYPE OF LIFT: MONOCABLE 8 PASSENGER GONDOLA

Dynamic Test Performed at
Capacity of 1070 PPH

FOREWORD

This Dynamic Test of Gondola Section 1 at Mountain Village, CO is for a Modification. The mechanical drive frame has been modified and the original DC Drive has been replaced with a new Variable Frequency AC Drive.

This test procedure has also been developed to assist the owner/operator in complying with the requirements of ANSI B77.1-2011 3.3.3.1.2 (Dynamic Testing). Some of these procedures may already be part of the owner's regularly scheduled maintenance and inspection program. It is the responsibility of the owner to schedule testing to meet the applicable requirements. Nothing in this procedure should be construed to require duplication of effort or tests beyond the requirements of the authority having jurisdiction.

Parts of this procedure may not be applicable to this lift, and this lift may contain devices or systems that are not listed in this procedure. It is the responsibility of the owner to maintain and verify the function of all safety systems and devices on the lift, including those not specifically listed in this procedure.

Some tests will require abnormal operation of the lift, including bypassing of safety systems, brake systems and rollback prevention systems. Only experienced personnel familiar with the lift and all systems shall perform these tests. Consult with the Operation and Maintenance Manual or contact the manufacturer prior to performance of the test if more detailed procedures are required.

TABLE OF CONTENTS

1.0	Personnel in Attendance
2.0	Review of Documents
3.0	Main Drive Tests
4.0	Lift Speed/Interval Checks
5.0	Loaded Lift Tests
6.0	Empty Lift Tests
7.0	Brake Torque Tests
8.0	Velocity and Torque over Time (VIt) Trends

1. PERSONNEL IN ATTENDANCE

	NAME	REPRESENTING
Test Conducted By:	Shawn Marquardt	Doppelmayr
Staff/Observers:	Matt Gulini	Doppelmayr
	Jim Loebe	Mtn Village
	Chuck Peterson	Representing Mtn Village
	Peter Belau	CPTSB

2. REVIEW OF DOCUMENTS

Certification of Design (if required)	Deliver by 5/12/16
Equipment Data Sheet	Deliver by 5/12/16
As-Built Drawings	Deliver by 5/12/16

3. MAIN DRIVE TESTS

LOCATION:	**ELECTRIC MOTOR 1**
Manufacturer	Baldor ABB
Power	500HP
Voltage	460V
Nominal Current	566A
Nominal Speed	1775 RPM
Model Number (Fr)	RL4022Z
S/N	66160620115

3.1. FUNCTIONAL TEST OF DRIVE MONITORING

Verify functionality of Electronic Speed-Regulated Drive Monitoring as required by ANSI B77.1-2011 Section 3.2.8:

MONITOR	TEST METHOD	CHECKED
Field Loss (DC Drives Only)	N/A	N/A
Over-speed	Test via Drive HMI	SMM
Feedback Loss (as applicable)	Test via Drive HMI	SMM
Over-current	Test via Drive HMI	SMM

Verify functionality of Acceleration and Speed Control as required by ANSI B77.1-2011 Section 3.1.2.4:

MONITOR	TEST METHOD	CHECKED
Acceleration does not exceed 2ft/sec^2 (0.61m/s^2)	Test via Drive HMI	SMM
Deceleration does not exceed 5ft/sec^2 (1.52m/s^2)	Test via Drive HMI	SMM

4. LIFT SPEED/CARRIER INTERVAL CHECKS

With empty lift at full speed, measure several consecutive carrier intervals:

Total Time (T)	112 s
Number of carriers (N)	4
Carrier Interval (T/N)	28 s
Actual Capacity	1029 PPH

With empty lift at full speed, verify lift speed by timing bullwheel revolutions:

Total Time (T)	N/A*
Number Revolutions (N)	N/A*
Time per Revolution (t = T/N)	N/A*
Bullwheel Diameter (d)	12 ft
Actual Speed (3.14159 * d/t)	984 fpm

***Speed verified with hand tach**

PREADJUSTMENT OF BRAKES (with Empty Lift)

***Not Performed**

	ACTUAL	
STOP TYPE	**DIST**	**DECEL**
Normal	ft	ft/s^2
Normal Ramp 2	ft	ft/s^2
Coasting (no brakes)	ft	ft/s^2
Service Brake Only	ft	ft/s^2
Emergency Brake Only	ft	ft/s^2
Emergency + Service Brake	ft	ft/s^2

5. LOADED LIFT TESTS

LOAD CALCULATIONS	
Number of carriers in system	33
Number of carriers in stations	4
Number of carriers between terminals	29
Total ballast required (14.5x8x170x110%)	21,692 lb
Number of loaded carriers	15
Weight per carrier	1496 lb
Type of ballast	Water

*This lift is unique in that the tire conveyors are driven by independent drives rather than PTO belts, therefore we are not concerned if a loaded carrier enters a station. More importantly, during testing we must ensure no unloaded carries launch onto the haul rope.

5.1. 110% DOWNHILL LOAD TESTS

5.1.1. MAIN DRIVE

Drive lift to design speed and record:

Acceleration Time	30 sec
Maximum Starting Torque	30 %
Continuous Torque	-3 %

Record stopping distance and deceleration rate for each type of stop listed.
Observe tension carriage movement and haul rope bounce during stops.

	STOP TYPE	DIST	AVERAGE	TORQUE	TREND
5.1.1.1	**Normal Stop**	**69 ft**	**1.95 ft/s^2**	**-86 %**	**1**
5.1.1.2	**Normal Ramp 2**	**55 ft**	**2.45 ft/s^2**	**-115 %**	**2**
5.1.1.3	**Coasting**	**N/A**	**N/A**	**N/A**	**3**
5.1.1.4	**Service Brake**	**133 ft**	**1.01 ft/s^2**	**N/A**	**4**
5.1.1.5	**Emergency Brake**	**111 ft**	**1.21 ft/s^2**	**N/A**	**5**
5.1.1.6	**E-Brake + S-Brake**	**83 ft**	**1.62 ft/s^2**	**N/A**	**6**

5.1.2. EVAC DRIVE

Drive the lift using the evac drive until the loaded cabins are moved to the uphill side.

5.2. 110% UPHILL LOAD TESTS

5.2.1. MAIN DRIVE

Drive lift to design speed and record:

Acceleration Time	30 sec
Maximum Starting Torque	95 %
Continuous Torque	63 %

Record stopping distance and deceleration rate for each type of stop listed.
Observe tension carriage movement and haul rope bounce during stops.

	STOP TYPE	DIST	AVERAGE	TORQUE	TREND
5.2.1.1	**Normal Stop**	**69 ft**	**1.95 ft/s^2**	**-40 %**	**7**
5.2.1.2	**Normal Ramp 2**	**54 ft**	**2.49 ft/s^2**	**-69 %**	**8**
5.2.1.3	**Coasting**	**78 ft**	**1.72 ft/s^2**	**N/A**	**9**
5.2.1.4	**Service Brake**	**68 ft**	**1.98 ft/s^2**	**N/A**	**10**
5.2.1.5	**Emergency Brake**	**53 ft**	**2.54 ft/s^2**	**N/A**	**11**
5.2.1.6	**E-Brake + S-Brake**	**49 ft**	*** 2.74 ft/s^2**	**N/A**	**12**

***The peak deceleration rate measured over 1s is 4.71 ft/s^2**

5.2.2. EVAC DRIVE

Drive the lift using the evac drive. Remove the load out of each cabin at the top station until all cabins are empty.

6. EMPTY LIFT TESTS

6.1. DECELERATION TESTS – MAIN DRIVE

Drive lift to design speed and record:

Acceleration Time	30 sec
Maximum Starting Torque	54 %
Continuous Torque	28 %

Record stopping distance and deceleration rate for each type of stop listed.
Observe tension carriage movement and haul rope bounce during stops.

	STOP TYPE	DIST	AVERAGE	TORQUE	TREND
6.1.1	**Normal Stop**	**69 ft**	**1.99 ft/s^2**	**-52 %**	**13**
6.1.2	**Normal Ramp 2**	**54 ft**	**2.49 ft/s^2**	**-79 %**	**14**
6.1.3	**Coasting**	**>155 ft**	**N/A**	**N/A**	**15**
6.1.4	**Service Brake**	**93 ft**	**1.45 ft/s^2**	**N/A**	**16**
6.1.5	**Emergency Brake**	**73 ft**	**1.84 ft/s^2**	**N/A**	**17**
6.1.6	**E-Brake + S-Brake**	**64 ft**	*** 2.10 ft/s^2**	**N/A**	**18**

***The peak deceleration rate measured over 1s is 3.99 ft/s^2**

7. **BRAKE TORQUE TESTS**

BRAKE TORQUE TEST PROCEDURE

USING ELECTRIC DRIVE

LIFT: **GONDOLA SECTION 1**
AREA: **MOUNTAIN VILLAGE, CO**

Brake torque is proportional to the electrical power required to drive the lift through the closed brake. Brake torque shall be verified periodically by measuring the motor torque required to drive the lift at slow speed through each brake.

As a minimum, brake torque must be verified before the start of each operating season, and after repairs or adjustments to any brakes.

For all tests, the lift must be free of all passengers, all carriers must be empty, and 28 carriers must be evenly spaced on line.

TEST VALUES

Lift speed during test = 200 fpm

	Motor Torque*	Brake Setting
No Brakes	23 %	N/A
Service Brake	77 %	13/16”
Emergency Brake	104 %	2” throw
Rollback Brake	80 %	3 7/8”

* For periodic testing, the test result must be between 95% and 110% of this test value.

8. VIt TRENDS

1. 5.1.1.1

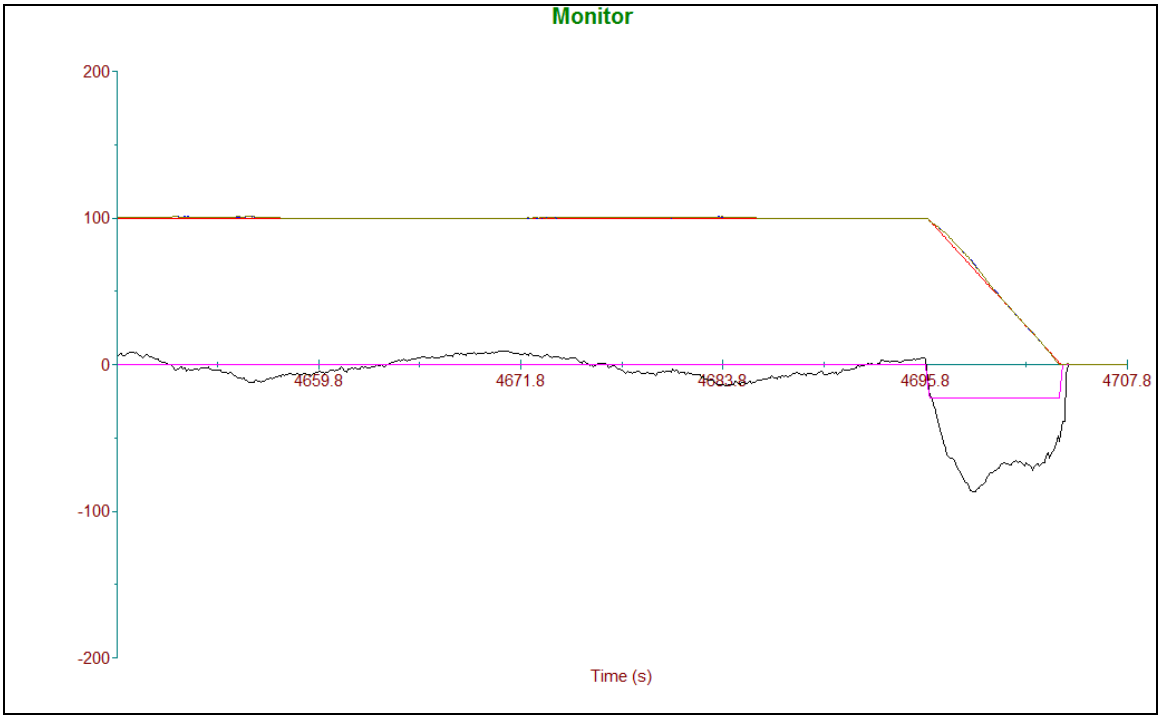

2. 5.1.1.2

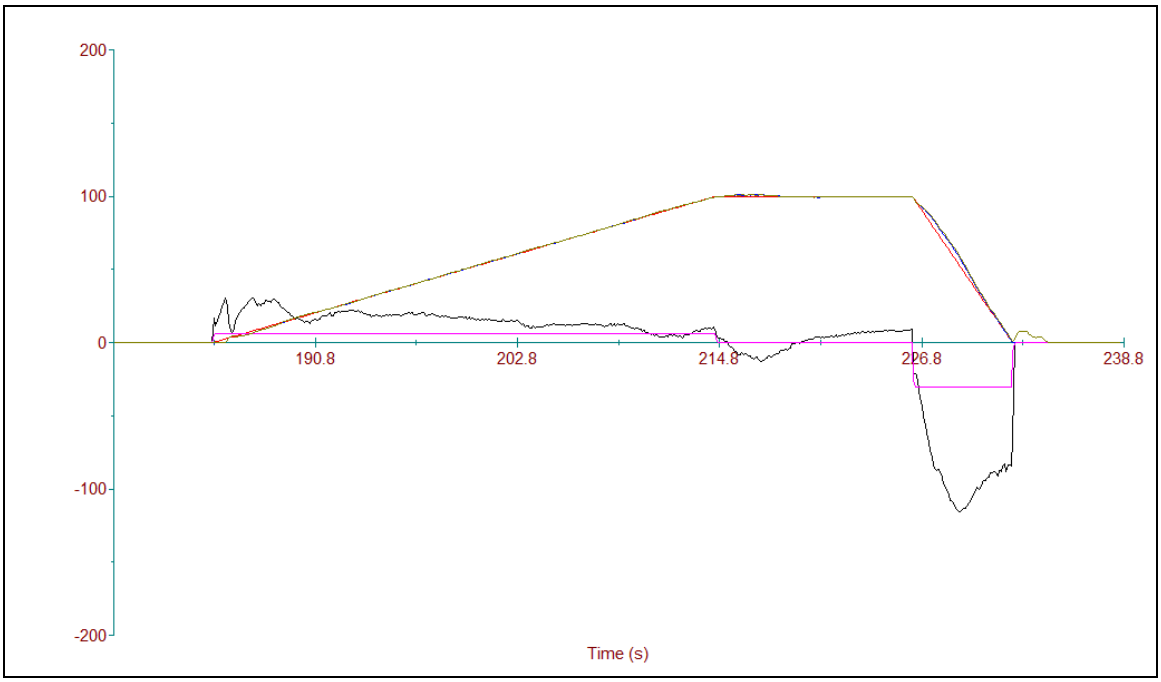

3. 5.1.1.3
   N/A

4. 5.1.1.4

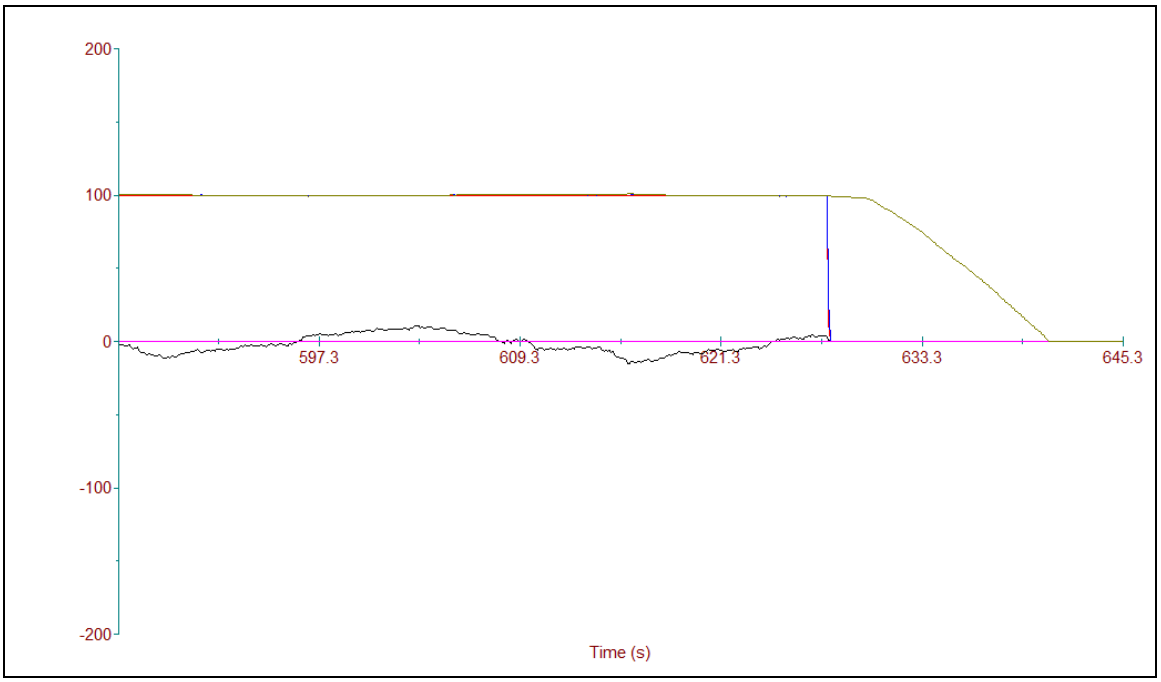
200
100
0
-100
-200
597.3
609.3
621.3
633.3
645.3
Time (s)

5. 5.1.1.5

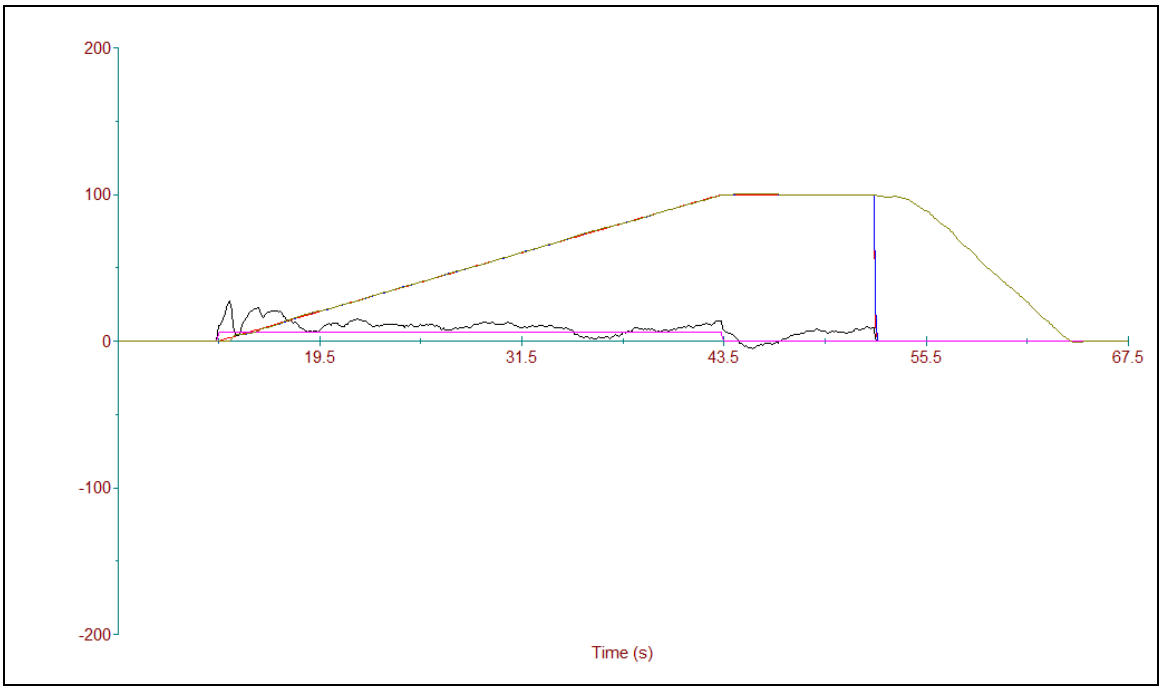
200
100
0
-100
-200
19.5
31.5
43.5
55.5
67.5
Time (s)

6. 5.1.1.6

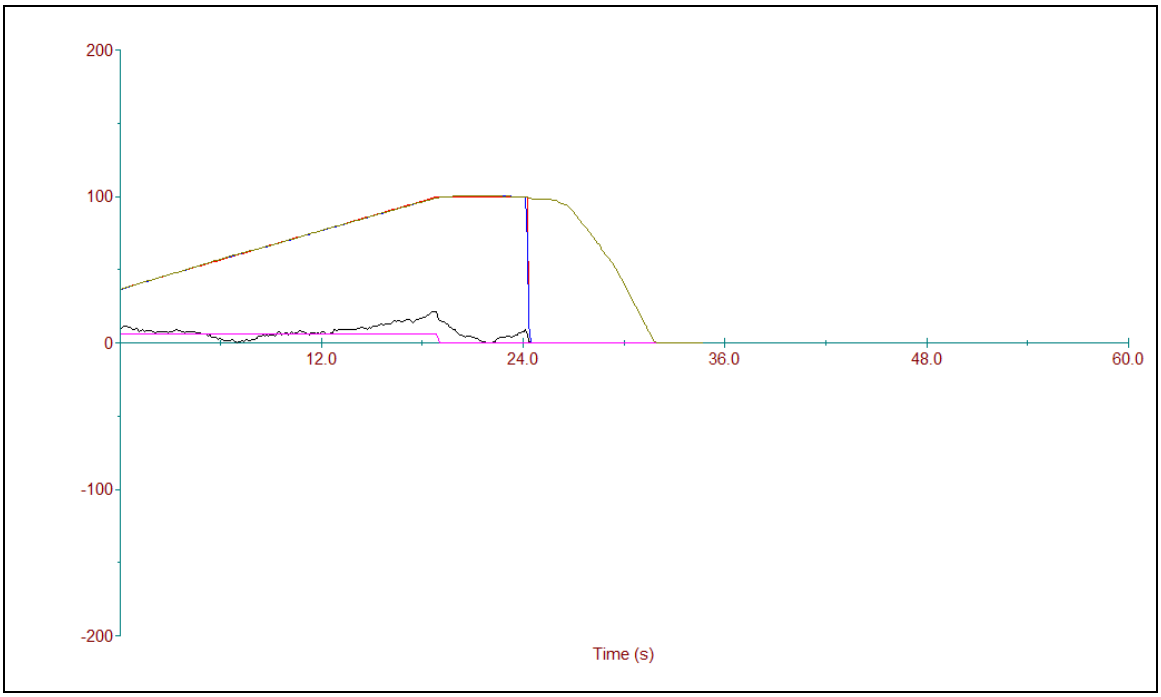
200
100
0
-100
-200
12.0
24.0
36.0
48.0
60.0
Time (s)

7. 5.2.1.1

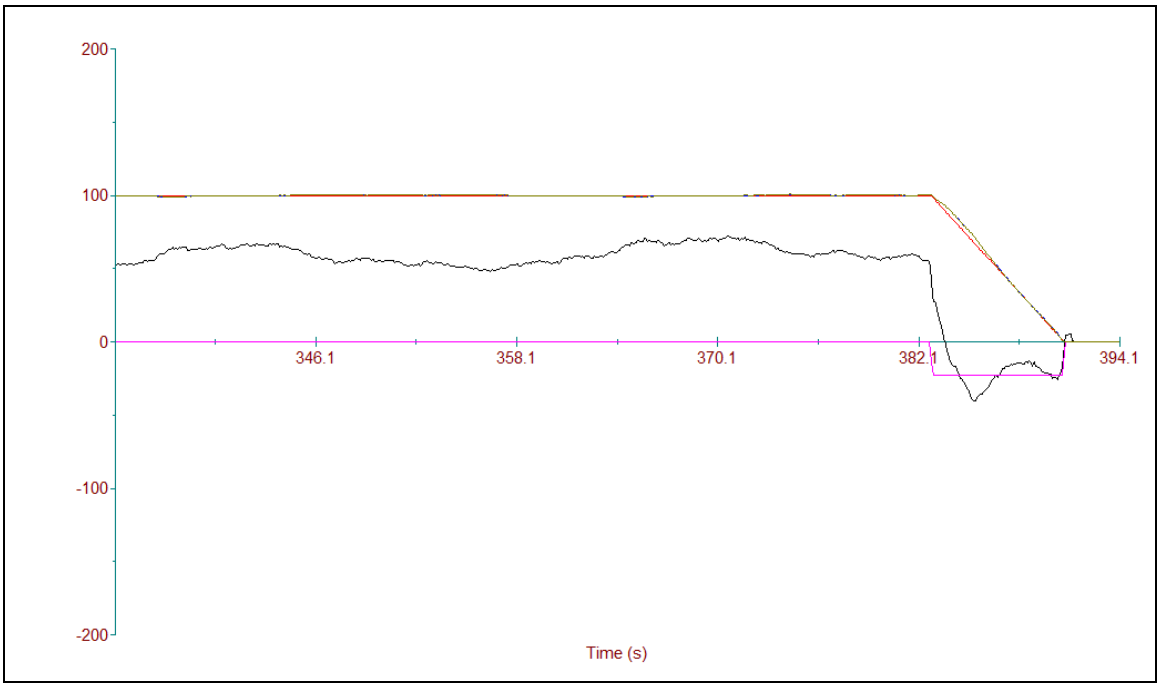
200
100
0
-100
-200
346.1
358.1
370.1
382.1
394.1
Time (s)

8. 5.2.1.2

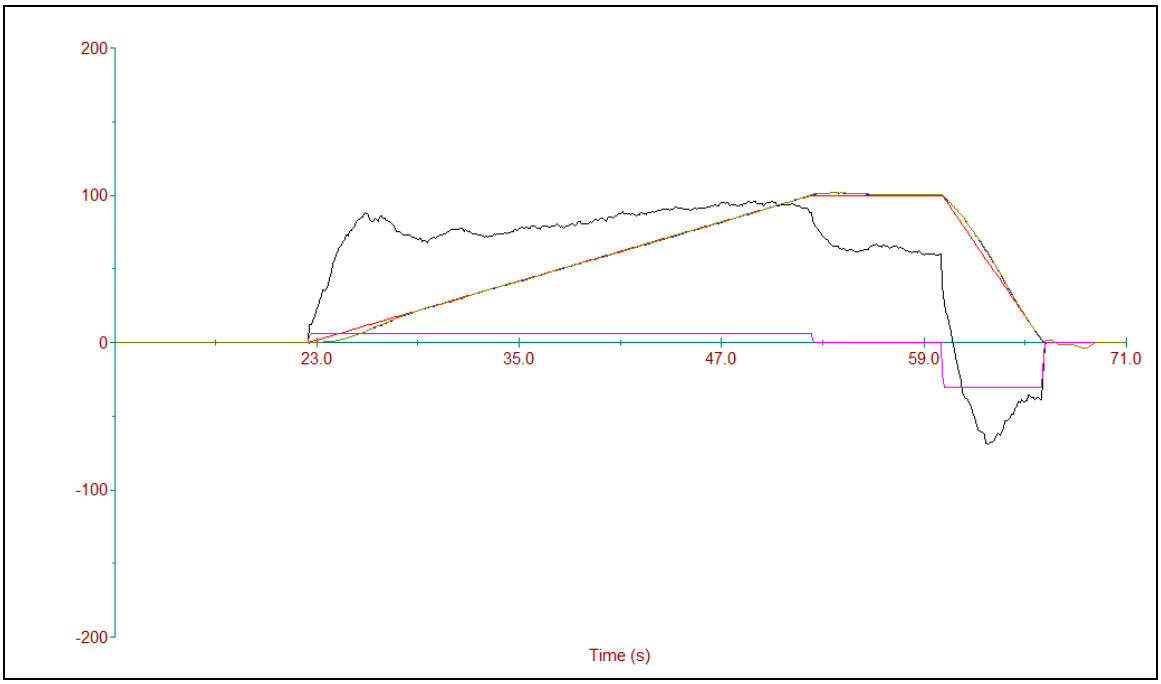
200
100
0
-100
-200
23.0
35.0
47.0
59.0
71.0
Time (s)

9. 5.2.1.3

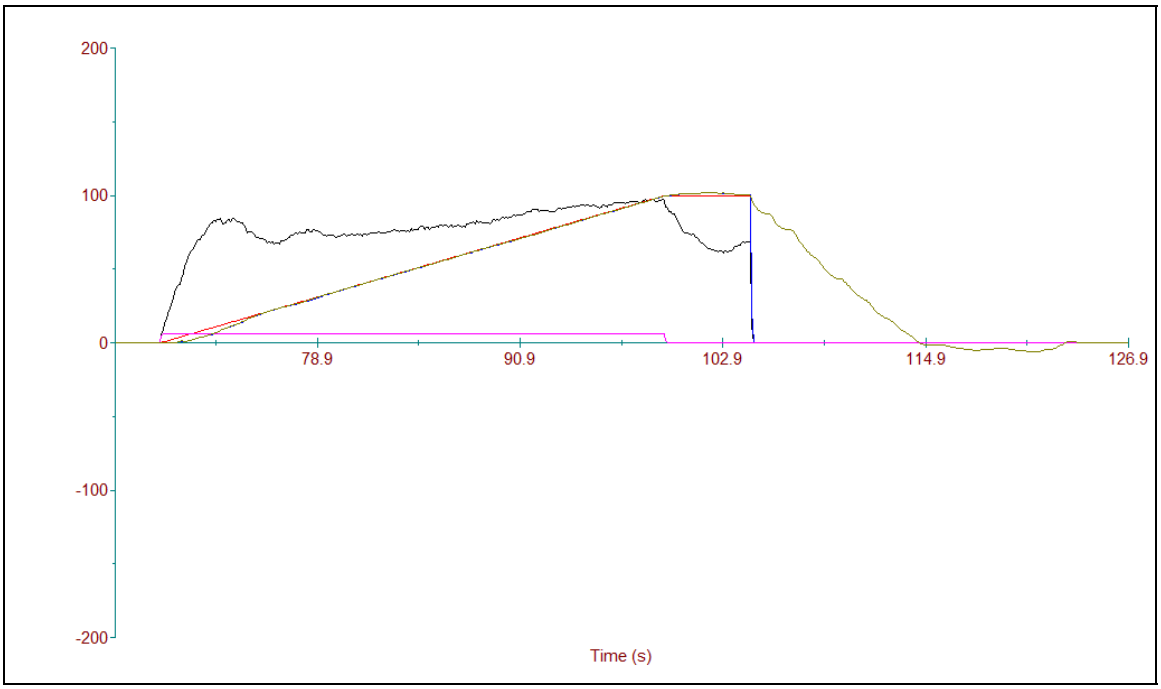
200
100
0
-100
-200
78.9
90.9
102.9
114.9
126.9
Time (s)

10. 5.2.1.4

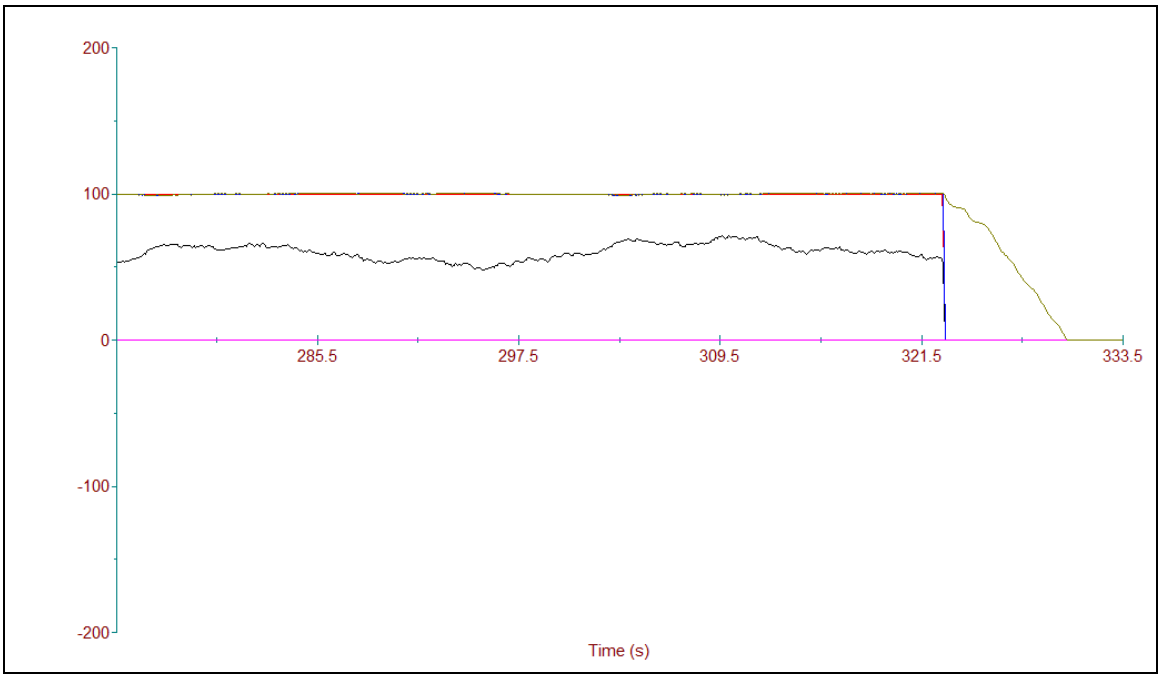

11. 5.2.1.5

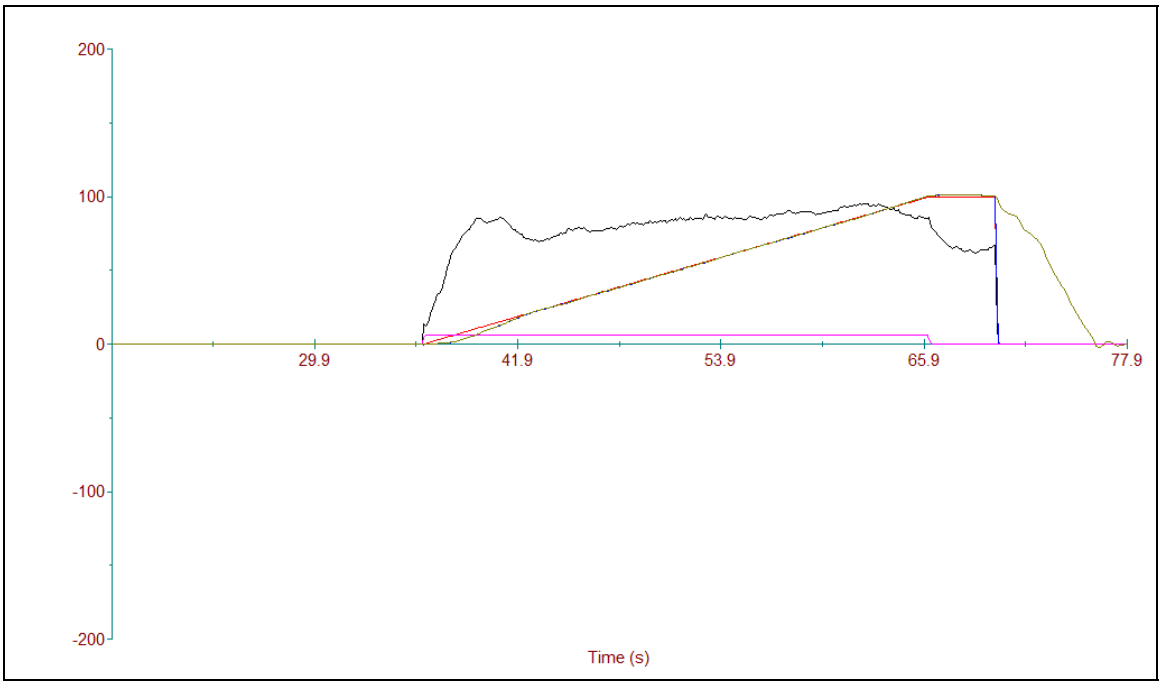

12. 5.2.1.6

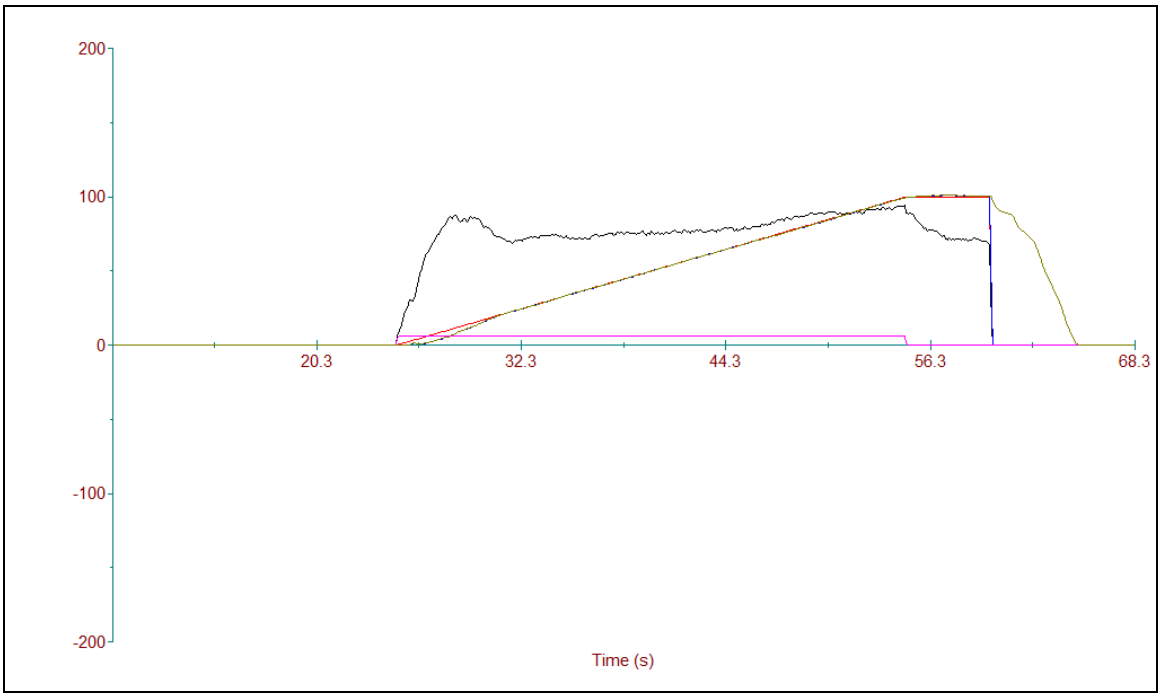

13. 6.1.1

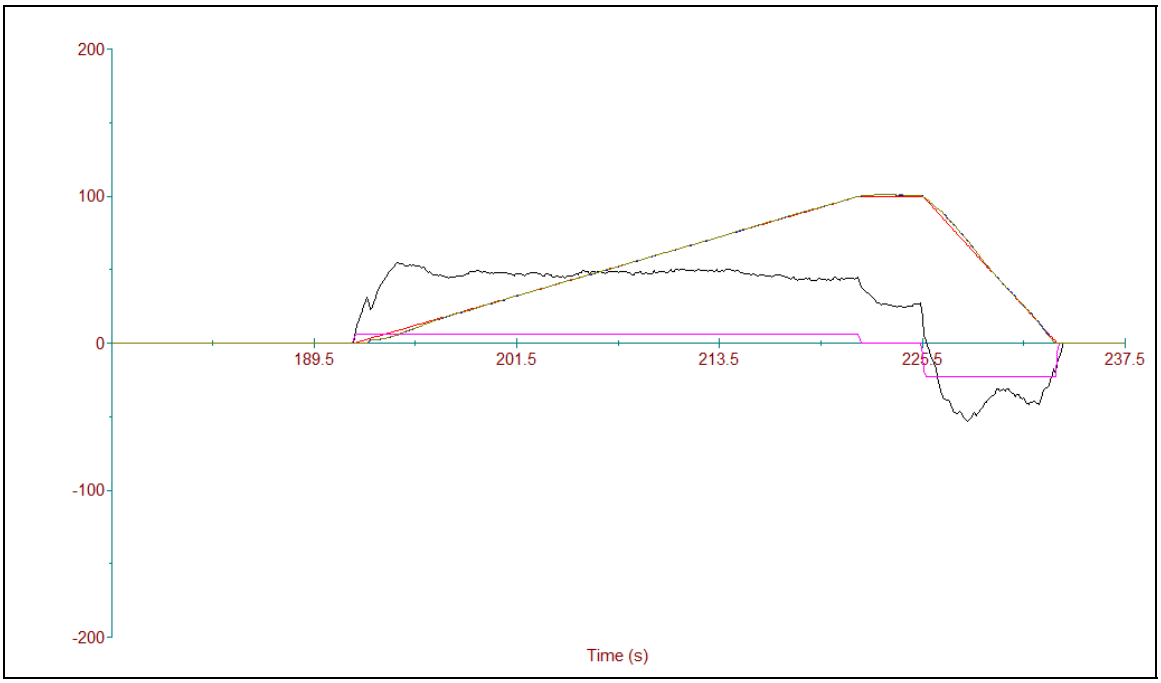

14. 6.1.2

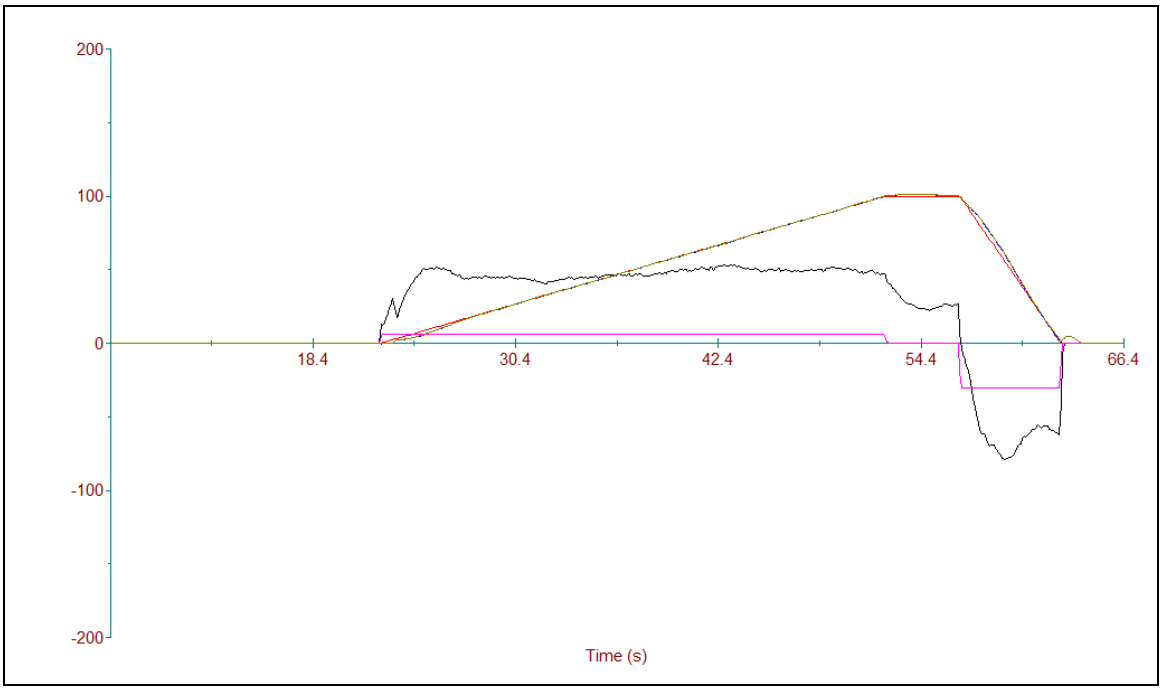
200
100
0
-100
-200
18.4
30.4
42.4
54.4
66.4
Time (s)

15. 6.1.3

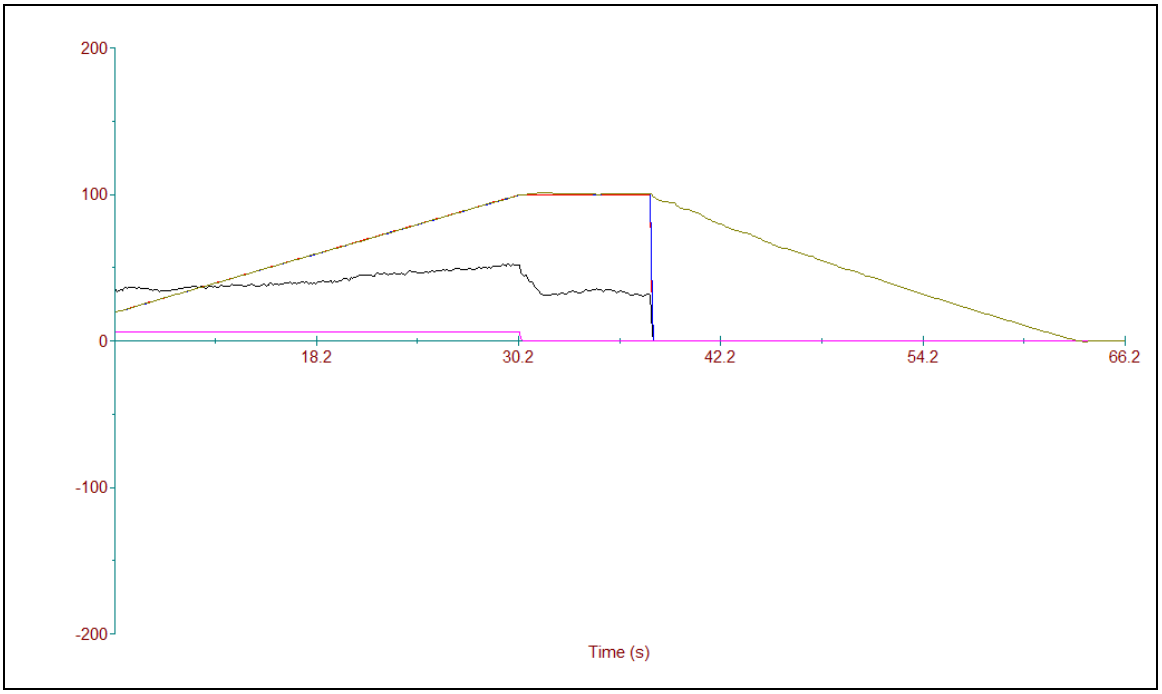
200
100
0
-100
-200
18.2
30.2
42.2
54.2
66.2
Time (s)

16. 6.1.4

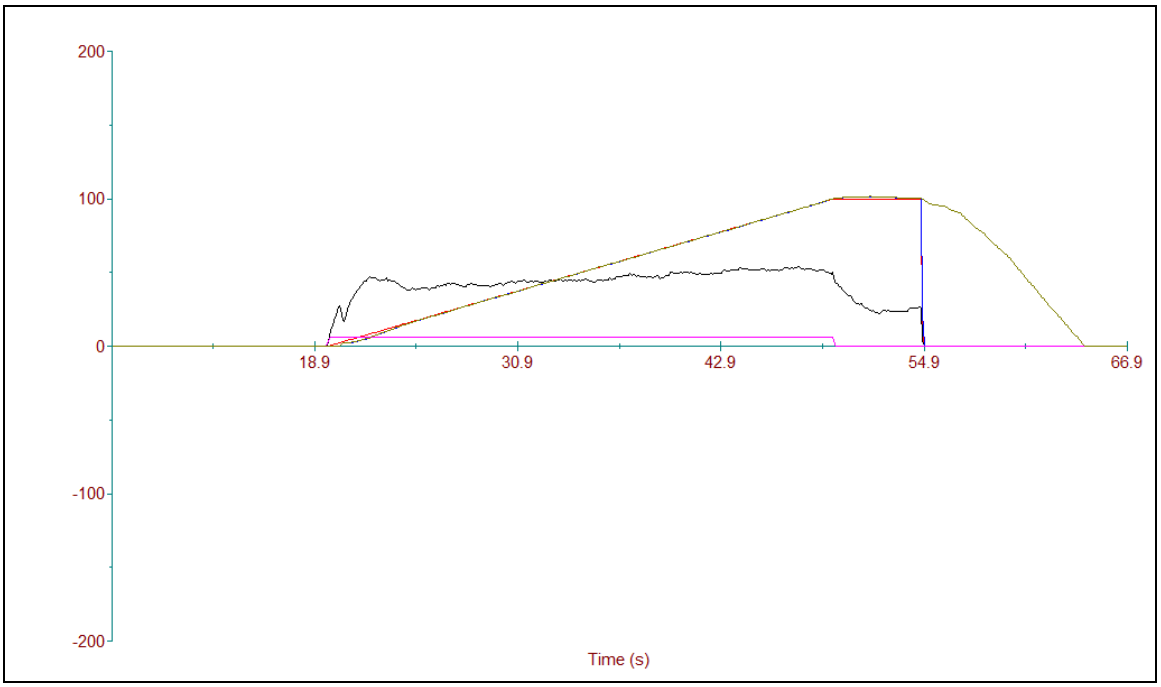
200
100
0
-100
-200
18.9
30.9
42.9
54.9
66.9
Time (s)

17. 6.1.5

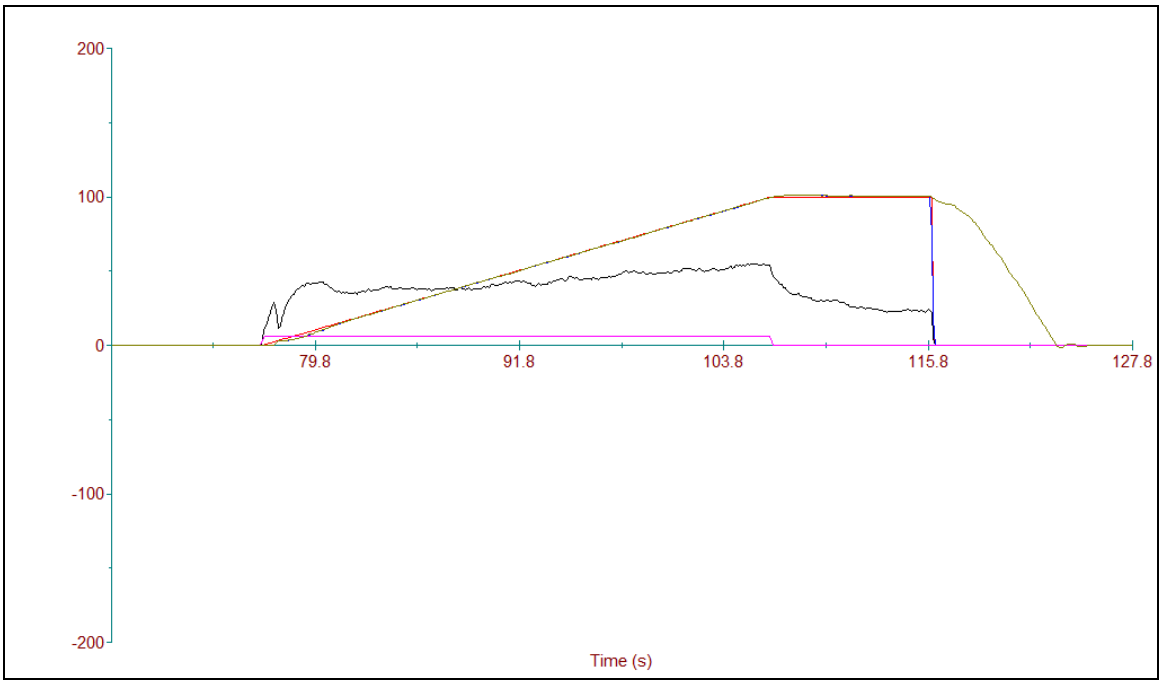
200
100
0
-100
-200
79.8
91.8
103.8
115.8
127.8
Time (s)

18. 6.1.6

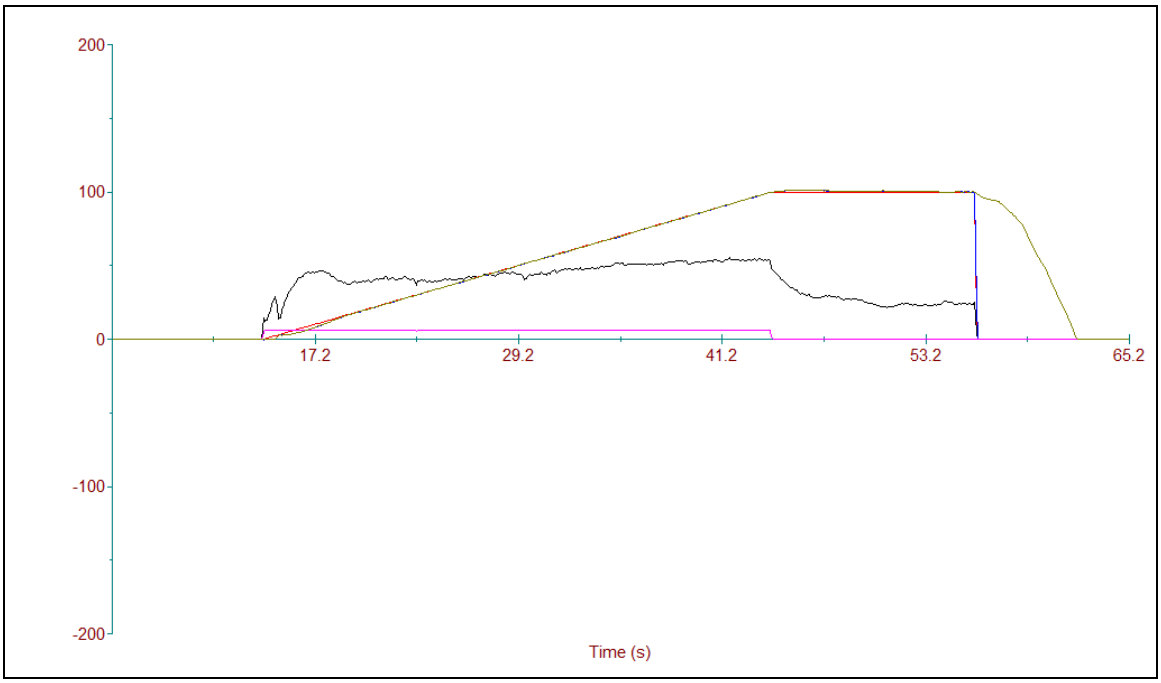

DYNAMIC TEST PROCEDURE

FOR

GONDOLA SECTION 2
Modification Project Number SAA0002401

AT

MOUNTAIN VILLAGE, CO

TYPE OF LIFT: MONOCABLE 8 PASSENGER GONDOLA

Dynamic Test Performed at
Capacity of 1070 PPH

FOREWORD

This Dynamic Test of Gondola Section 2 at Mountain Village, CO is for a Modification. The mechanical drive frame has been modified and the original DC Drive has been replaced with a new Variable Frequency AC Drive.

This test procedure has also been developed to assist the owner/operator in complying with the requirements of ANSI B77.1-2011 3.3.3.1.2 (Dynamic Testing). Some of these procedures may already be part of the owner's regularly scheduled maintenance and inspection program. It is the responsibility of the owner to schedule testing to meet the applicable requirements. Nothing in this procedure should be construed to require duplication of effort or tests beyond the requirements of the authority having jurisdiction.

Parts of this procedure may not be applicable to this lift, and this lift may contain devices or systems that are not listed in this procedure. It is the responsibility of the owner to maintain and verify the function of all safety systems and devices on the lift, including those not specifically listed in this procedure.

Some tests will require abnormal operation of the lift, including bypassing of safety systems, brake systems and rollback prevention systems. Only experienced personnel familiar with the lift and all systems shall perform these tests. Consult with the Operation and Maintenance Manual or contact the manufacturer prior to performance of the test if more detailed procedures are required.

TABLE OF CONTENTS

1.0	Personnel in Attendance
2.0	Review of Documents
3.0	Main Drive Tests
4.0	Lift Speed/Interval Checks
5.0	Loaded Lift Tests
6.0	Empty Lift Tests
7.0	Brake Torque Tests
8.0	Velocity and Torque over Time (VIt) Trends

1. PERSONNEL IN ATTENDANCE

	NAME	REPRESENTING
Test Conducted By:	Shawn Marquardt	Doppelmayr
Staff/Observers:	Matt Gulini	Doppelmayr
	Jim Loebe	Mtn Village
	Larry Forsythe	Mtn Village
	Peter Belau	CPTSB
	Larry Smith	CPTSB
	Chuck Peterson	Representing Mtn Village

2. REVIEW OF DOCUMENTS

Certification of Design (if required)	Deliver by 5/12/16
Equipment Data Sheet	Deliver by 5/12/16
As-Built Drawings	Deliver by 5/12/16

3. MAIN DRIVE TESTS

LOCATION:	**ELECTRIC MOTOR 1**
Manufacturer	Baldor ABB
Power	500HP
Voltage	460V
Nominal Current	566A
Nominal Speed	1775 RPM
Model Number (Fr)	RL4022Z
S/N	66160620113

3.1. FUNCTIONAL TEST OF DRIVE MONITORING

Verify functionality of Electronic Speed-Regulated Drive Monitoring as required by ANSI B77.1-2011 Section 3.2.8:

MONITOR	TEST METHOD	CHECKED
Field Loss (DC Drives Only)	N/A	N/A
Over-speed	Test via Drive HMI	SMM
Feedback Loss (as applicable)	Test via Drive HMI	SMM
Over-current	Test via Drive HMI	SMM

Verify functionality of Acceleration and Speed Control as required by ANSI B77.1-2011 Section 3.1.2.4:

MONITOR	TEST METHOD	CHECKED
Acceleration does not exceed 2ft/sec^2 (0.61m/s^2)	Test via Drive HMI	SMM
Deceleration does not exceed 5ft/sec^2 (1.52m/s^2)	Test via Drive HMI	SMM

4. LIFT SPEED/CARRIER INTERVAL CHECKS

With empty lift at full speed, measure several consecutive carrier intervals:

Total Time (T)	87 s
Number of carriers (N)	3
Carrier Interval (T/N)	29 s
Actual Capacity	993 PPH

With empty lift at full speed, verify lift speed by timing bullwheel revolutions:

Total Time (T)	s
Number Revolutions (N)	
Time per Revolution (t = T/N)	s
Bullwheel Diameter (d)	12 ft
Actual Speed (3.14159 * d/t)	984 fpm

***Speed verified with a hand tach**

PREADJUSTMENT OF BRAKES (with Empty Lift)

***This data is thrown out as only 21 cabins were on line**

	ACTUAL	
STOP TYPE	**DIST**	**DECEL**
Normal	ft	ft/s^2
Normal Ramp 2	ft	ft/s^2
Coasting (no brakes)	ft	ft/s^2
Service Brake Only	ft	ft/s^2
Emergency Brake Only	ft	ft/s^2
Emergency + Service Brake	ft	ft/s^2

5. LOADED LIFT TESTS

LOAD CALCULATIONS	
Number of carriers in system	24
Number of carriers in stations	4
Number of carriers between terminals	20
Total ballast required (10x8x170x110%)	14,960 lb
Number of loaded carriers	12
Weight per carrier	1496 lb
Type of ballast	Water

*This lift is unique in that the tire conveyors are driven by independent drives rather than PTO belts, therefore we are not concerned if a loaded carrier enters a station. More importantly, during testing we must ensure no unloaded carries launch onto the haul rope.

5.1. 110% DOWNHILL LOAD TESTS

5.1.1. MAIN DRIVE

Drive lift to design speed and record:

Acceleration Time	30 sec
Maximum Starting Torque	23 %
Continuous Torque	8 %

Record stopping distance and deceleration rate for each type of stop listed.
Observe tension carriage movement and haul rope bounce during stops.

	STOP TYPE	DIST	AVERAGE	TORQUE	TREND
5.1.1.1	**Normal Stop**	**68 ft**	**1.98 ft/s^2**	**-54 %**	**7**
5.1.1.2	**Normal Ramp 2**	**55 ft**	**2.45 ft/s^2**	**-81 %**	**8**
5.1.1.3	**Coasting**	**>155 ft**	**N/A**	**N/A**	**9**
5.1.1.4	**Service Brake**	**102 ft**	**1.32 ft/s^2**	**N/A**	**10**
5.1.1.5	**Emergency Brake**	**95 ft**	**1.42 ft/s^2**	**N/A**	**11**
5.1.1.6	**E-Brake + S-Brake**	**78 ft**	**1.72 ft/s^2**	**N/A**	**12**

5.1.2. EVAC DRIVE

Drive the lift using the evac drive until the loaded cabins are moved to the uphill side.

5.2. 110% UPHILL LOAD TESTS

5.2.1. MAIN DRIVE

Drive lift to design speed and record:

Acceleration Time	30 sec
Maximum Starting Torque	69 %
Continuous Torque	38 %

Record stopping distance and deceleration rate for each type of stop listed.
Observe tension carriage movement and haul rope bounce during stops.

	STOP TYPE	DIST	AVERAGE	TORQUE	TREND
5.2.1.1	**Normal Stop**	**68 ft**	**1.98 ft/s^2**	**-23 %**	**13**
5.2.1.2	**Normal Ramp 2**	**53 ft**	**2.54 ft/s^2**	**-47 %**	**14**
5.2.1.3	**Coasting**	**93 ft**	**1.45 ft/s^2**	**N/A**	**15**
5.2.1.4	**Service Brake**	**52 ft**	**2.58 ft/s^2**	**N/A**	**16**
5.2.1.5	**Emergency Brake**	**58 ft**	**2.32 ft/s^2**	**N/A**	**17**
5.2.1.6	**E-Brake + S-Brake**	**58 ft**	**2.32 ft/s^2**	**N/A**	**18**

5.2.2. EVAC DRIVE

Drive the lift using the evac drive. Remove the load out of each cabin at the top station until all cabins are empty.

6. EMPTY LIFT TESTS

6.1. DECELERATION TESTS – MAIN DRIVE

Drive lift to design speed and record:

Acceleration Time	30 sec
Maximum Starting Torque	40 %
Continuous Torque	20 %

Record stopping distance and deceleration rate for each type of stop listed.
Observe tension carriage movement and haul rope bounce during stops.

	STOP TYPE	DIST	AVERAGE	TORQUE	TREND
6.1.1	**Normal Stop**	**68 ft**	**1.98 ft/s^2**	**-33 %**	**19**
6.1.2	**Normal Ramp 2**	**53 ft**	**2.54 ft/s^2**	**-48 %**	**20**
6.1.3	**Coasting**	**>155 ft**	**N/A**	**N/A**	**21**
6.1.4	**Service Brake**	**79 ft**	**1.70 ft/s^2**	**N/A**	**22**
6.1.5	**Emergency Brake**	**78 ft**	**1.72 ft/s^2**	**N/A**	**23**
6.1.6	**E-Brake + S-Brake**	**61 ft**	*** 2.20 ft/s^2**	**N/A**	**24**

***The peak deceleration rate measured over 1s is 4.54 ft/s^2**

7. **BRAKE TORQUE TESTS**

BRAKE TORQUE TEST PROCEDURE

USING ELECTRIC DRIVE

LIFT: **GONDOLA SECTION 2**
AREA: **MOUNTAIN VILLAGE, CO**

Brake torque is proportional to the electrical power required to drive the lift through the closed brake. Brake torque shall be verified periodically by measuring the motor torque required to drive the lift at slow speed through each brake.

As a minimum, brake torque must be verified before the start of each operating season, and after repairs or adjustments to any brakes.

For all tests, the lift must be free of all passengers, all carriers must be empty, and 20 carriers must be evenly spaced on line.

TEST VALUES

Lift speed during test = 200 fpm

	Motor Torque*	Brake Setting
No Brakes	18 %	N/A
Service Brake	67 %	7/8”
Emergency Brake	98 %	2” Throw
Rollback Brake	54 %	4 1/16”

* For periodic testing, the test result must be between 95% and 110% of this test value.

8. **VIt TRENDS**

7. 5.1.1.1

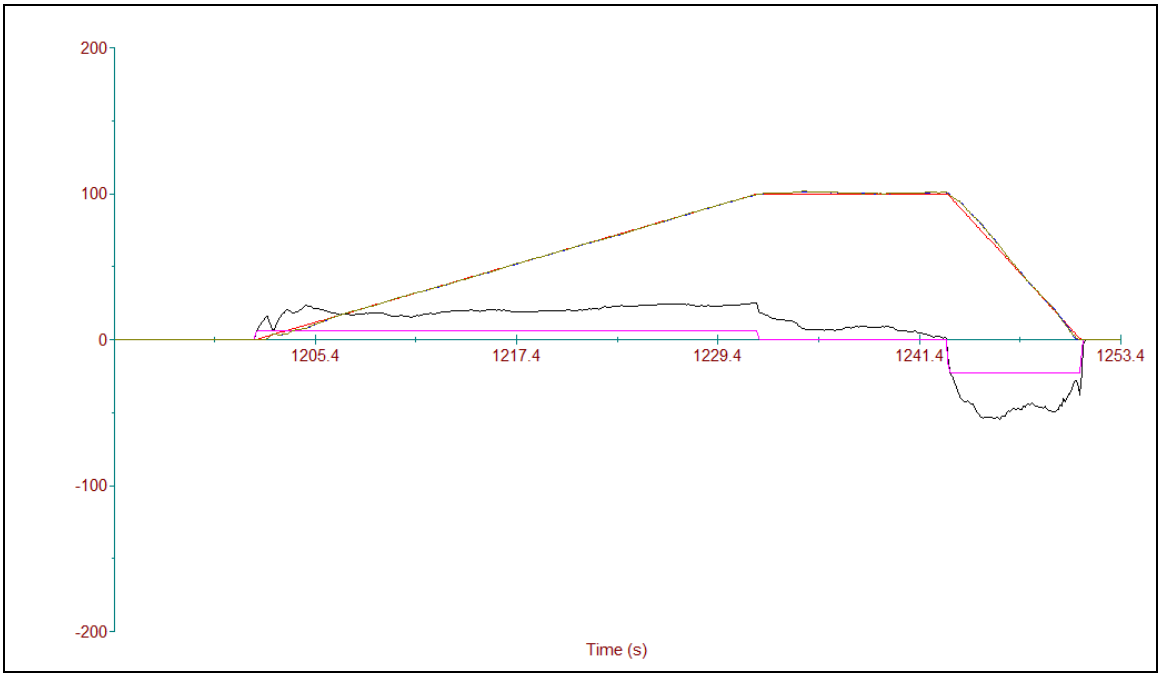

8. 5.1.1.2

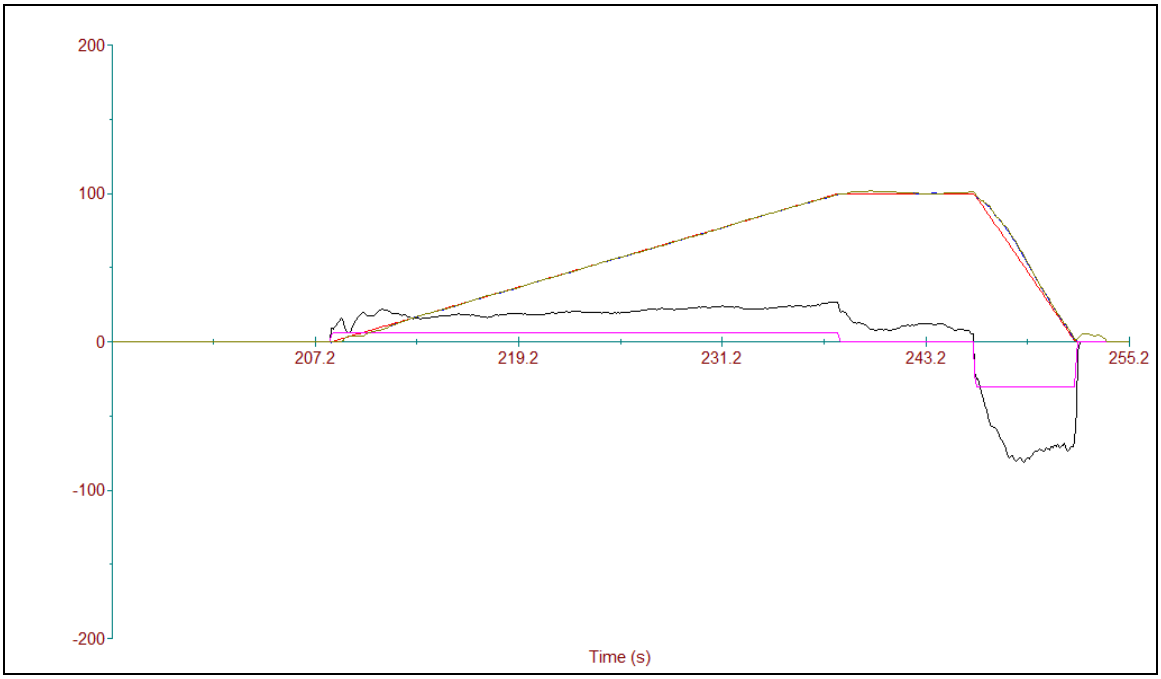

9. 5.1.1.3
   N/A

10. 5.1.1.4

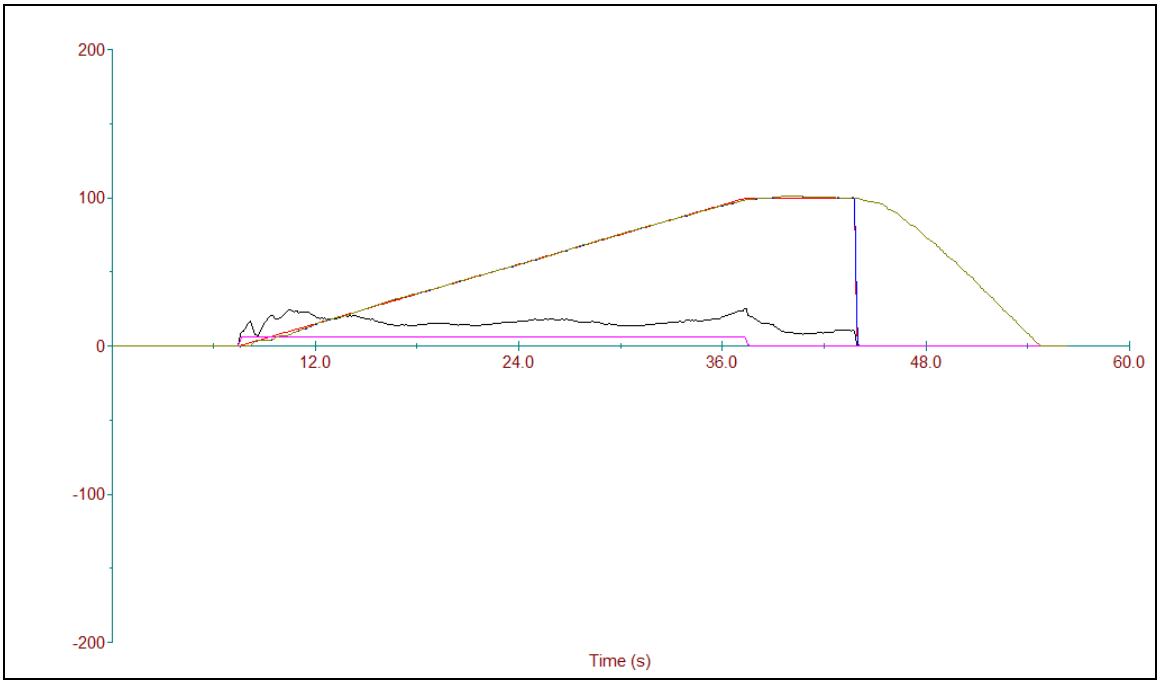

11. 5.1.1.5

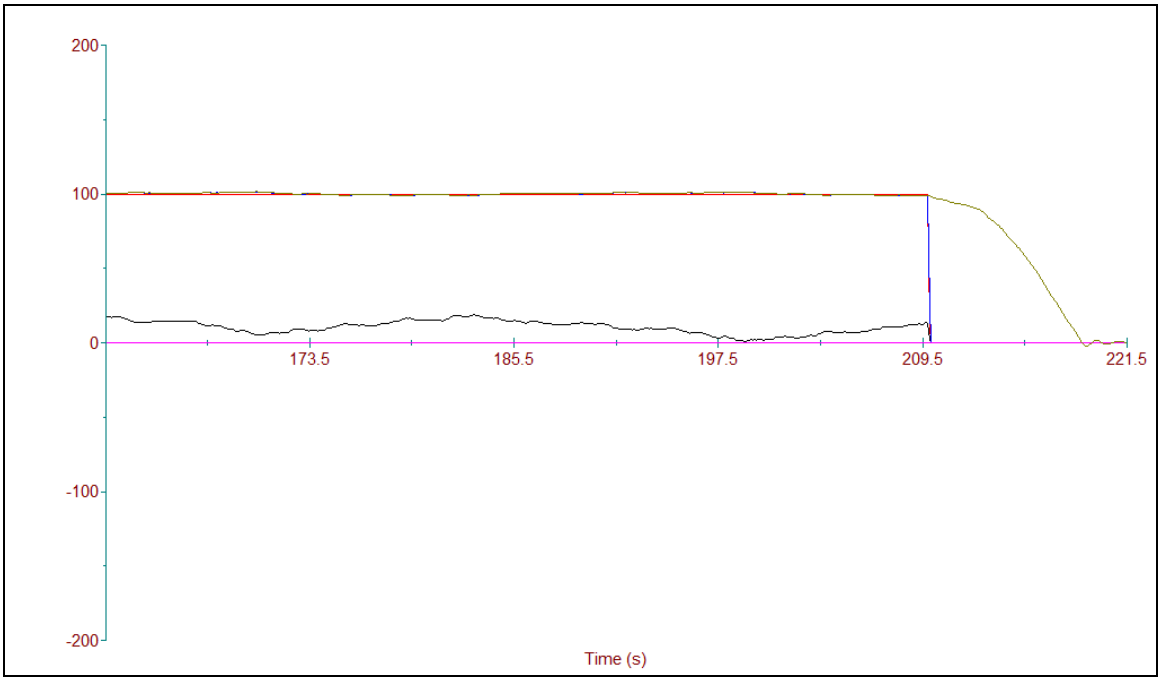

12. 5.1.1.6

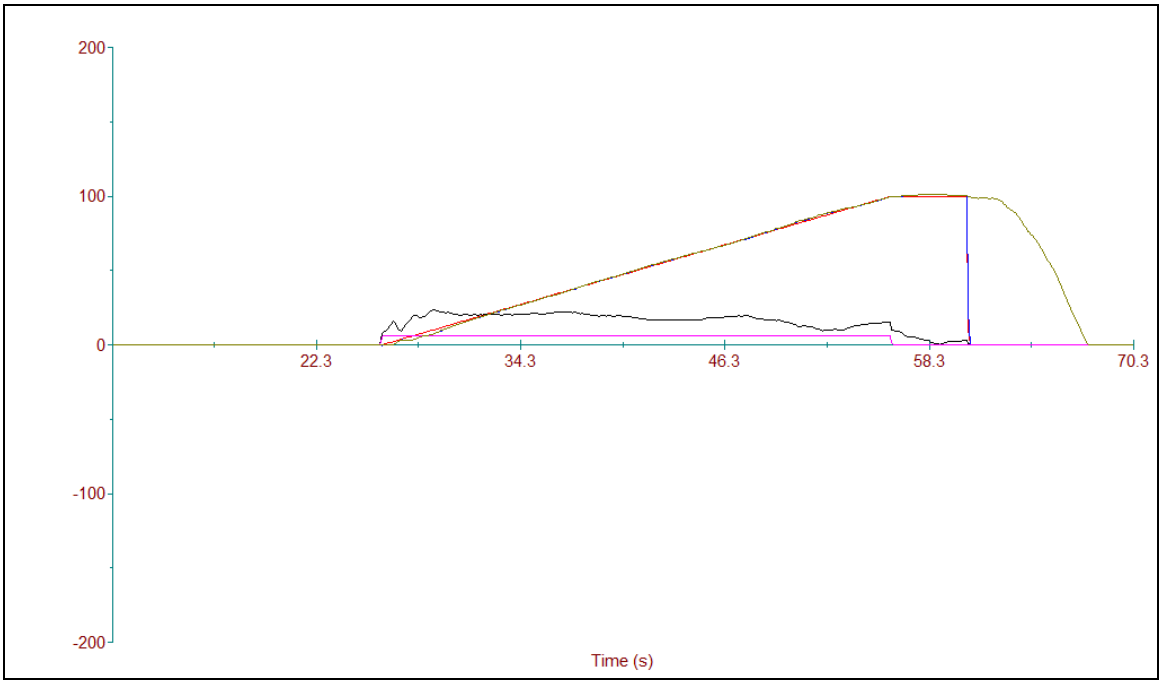

13. 5.2.1.1

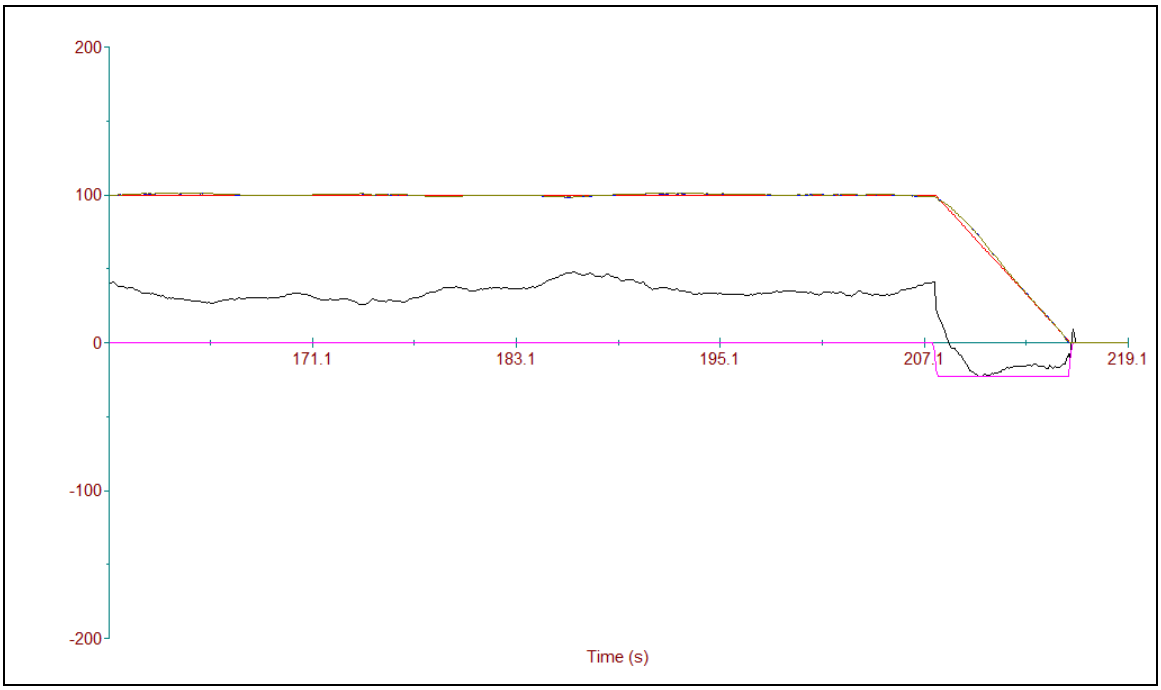

14. 5.2.1.2

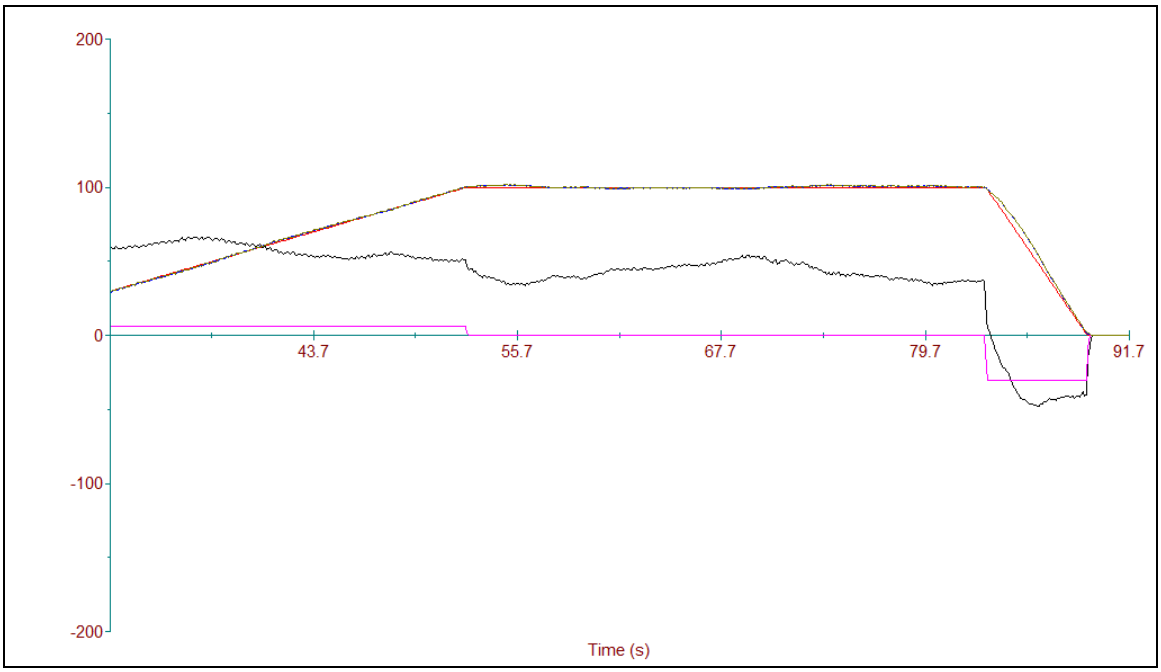

15. 5.2.1.3

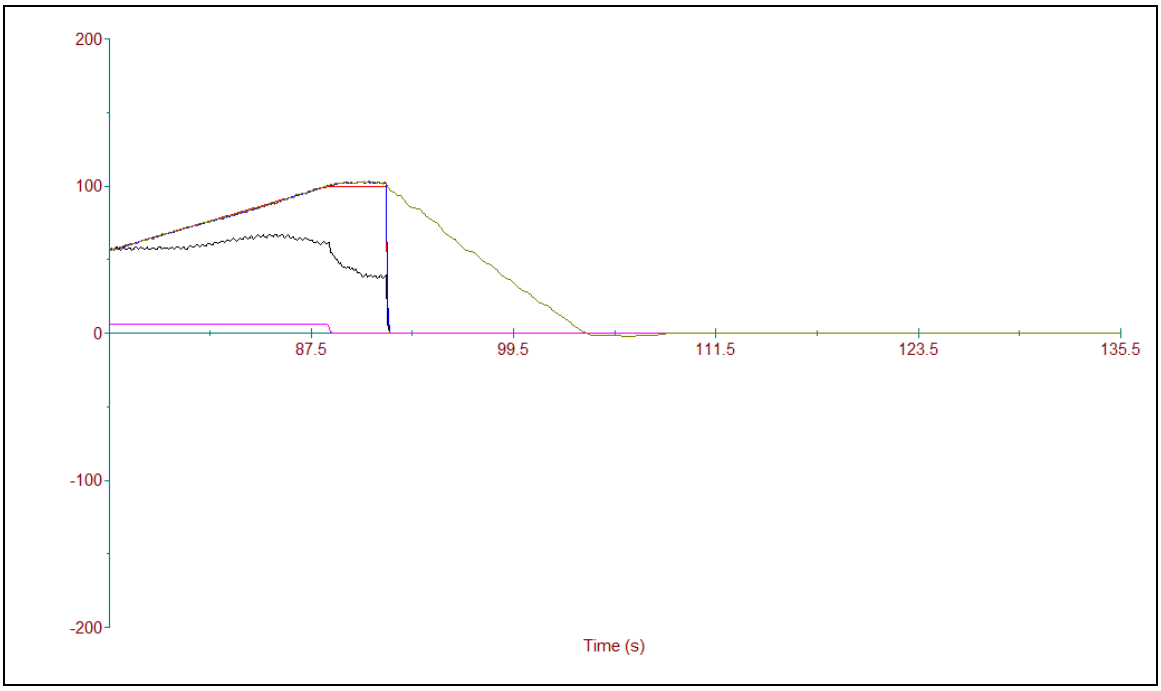

16. 5.2.1.4

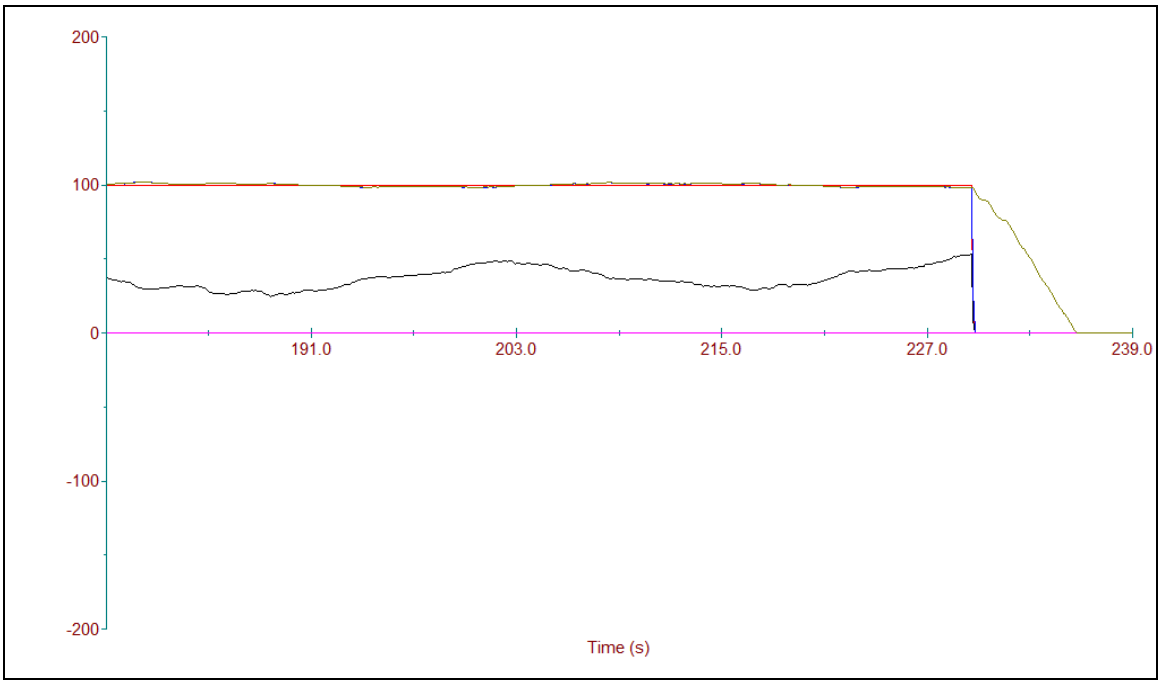

17. 5.2.1.5

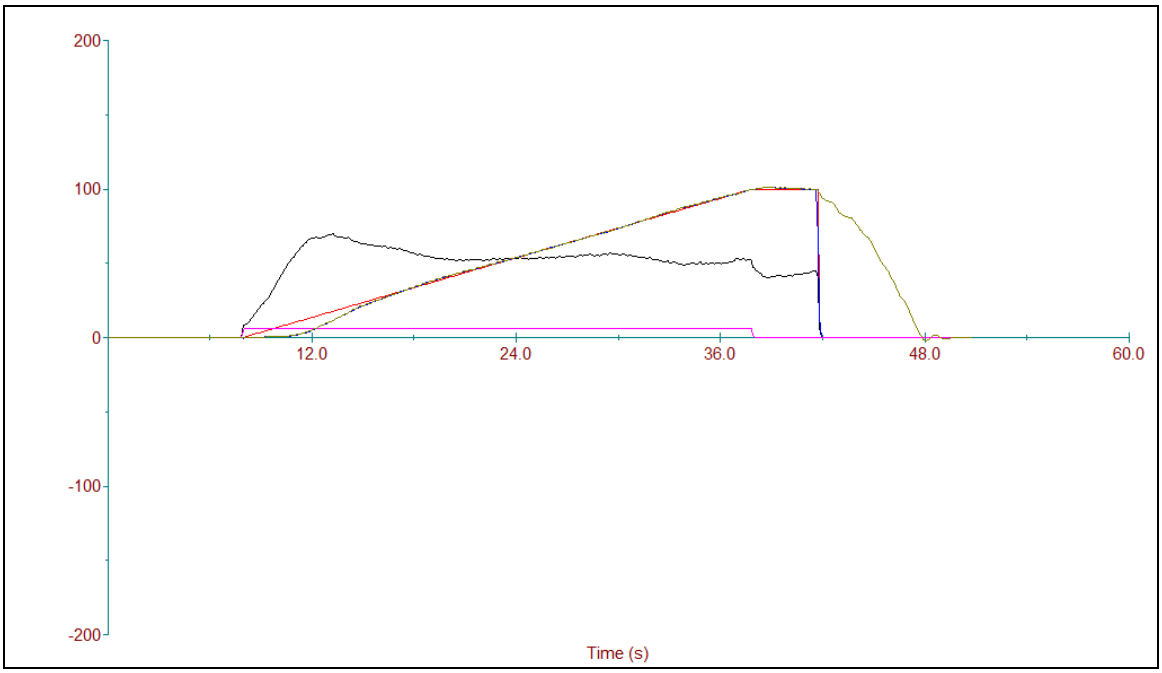

18. 5.2.1.6

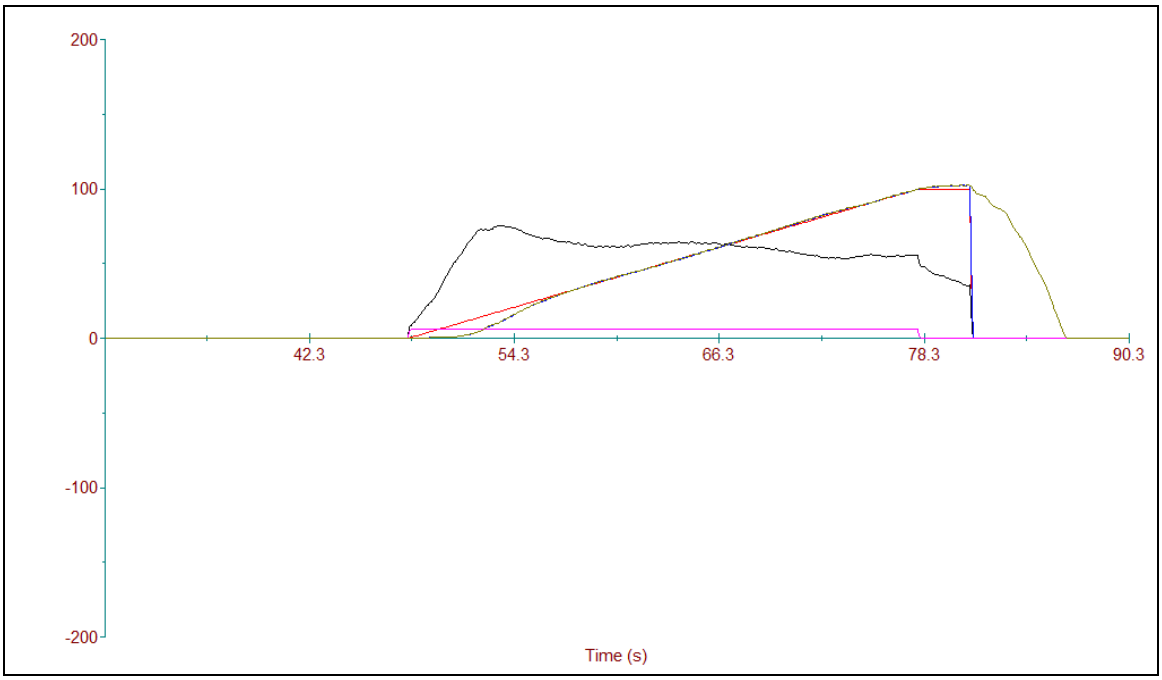

19. 6.1.1

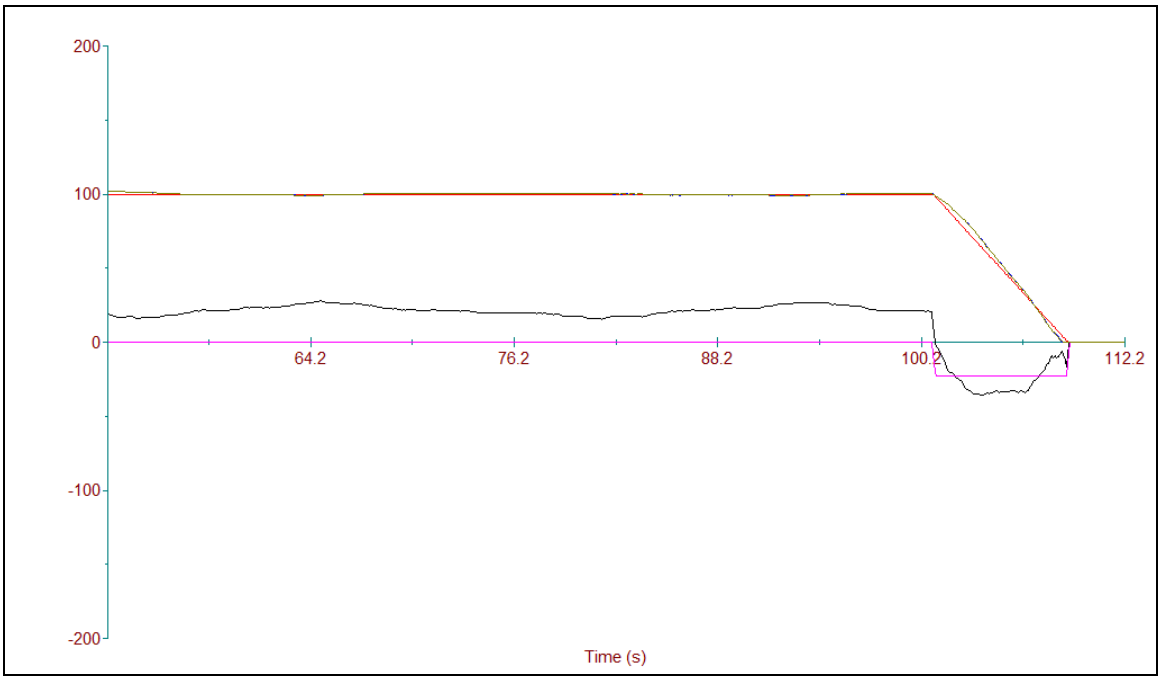

20. 6.1.2

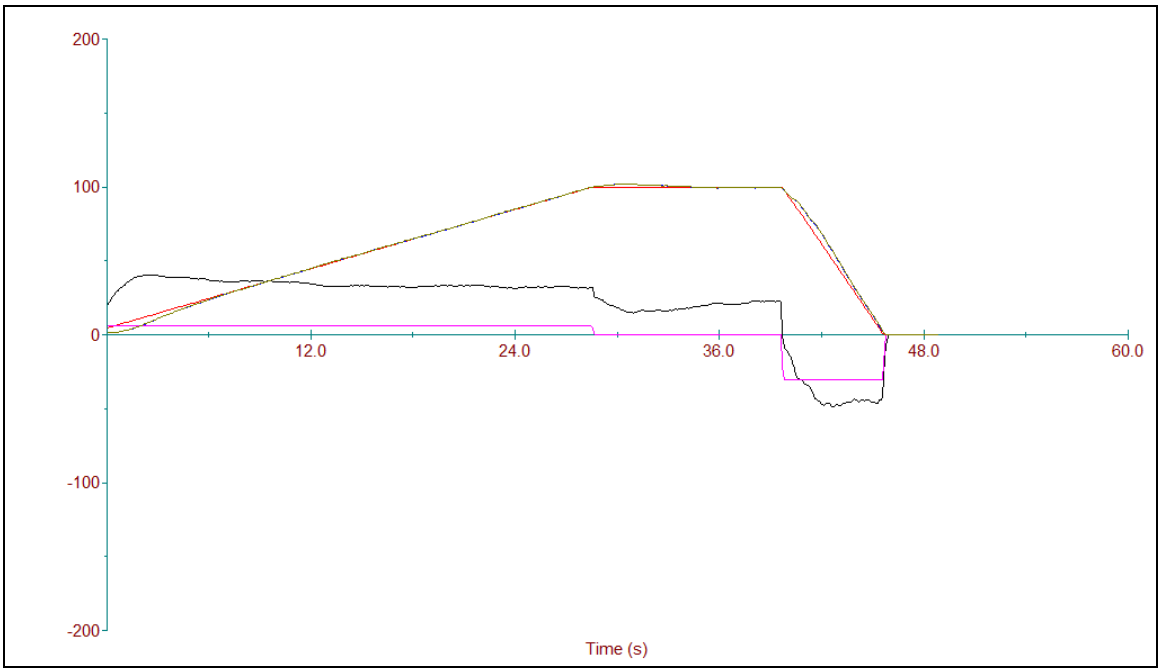
200
100
0
-100
-200
12.0
24.0
36.0
48.0
60.0
Time (s)

21. 6.1.3

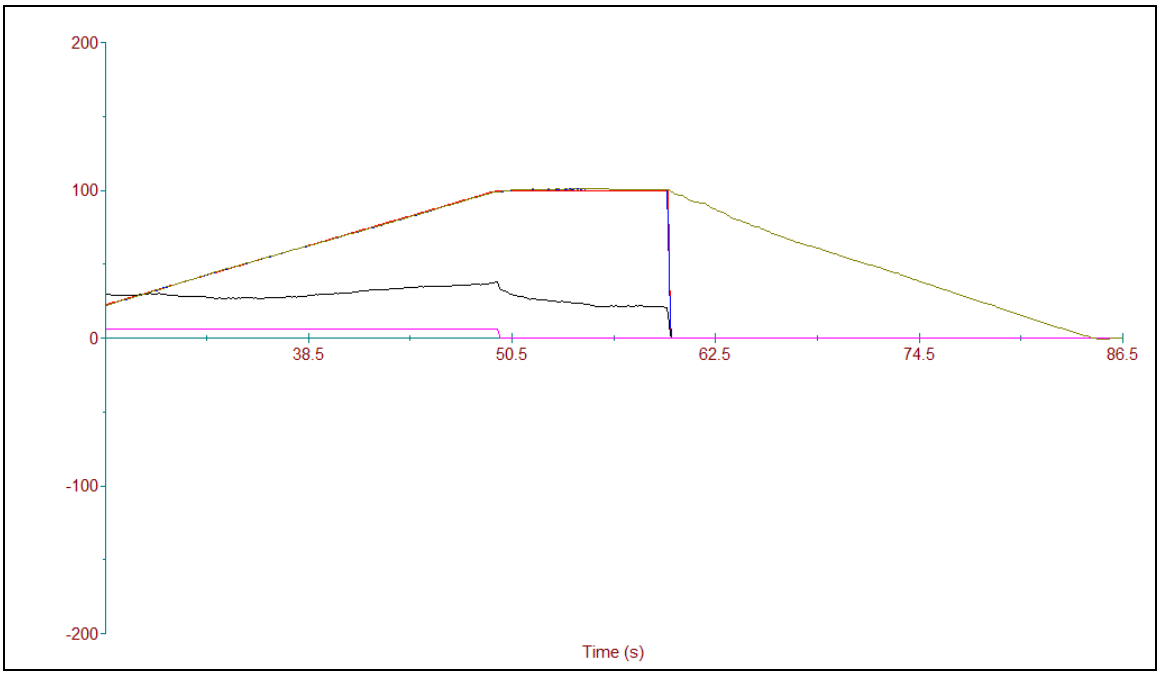
200
100
0
-100
-200
38.5
50.5
62.5
74.5
86.5
Time (s)

22. 6.1.4

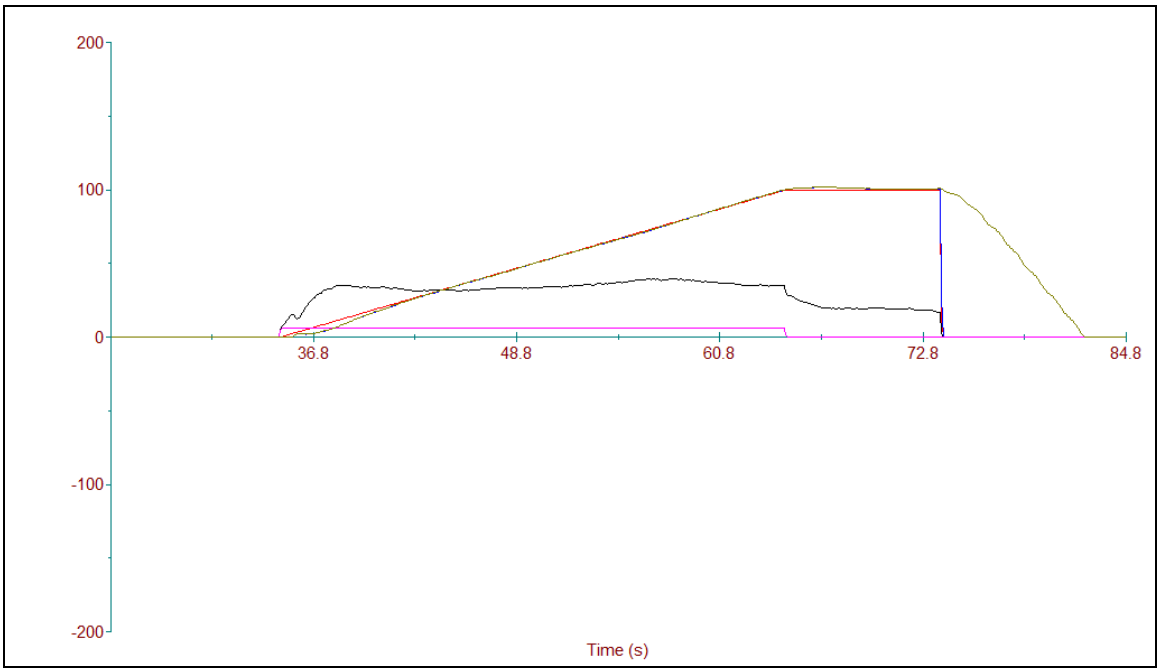
200
100
0
-100
-200
36.8
48.8
60.8
72.8
84.8
Time (s)

23. 6.1.5

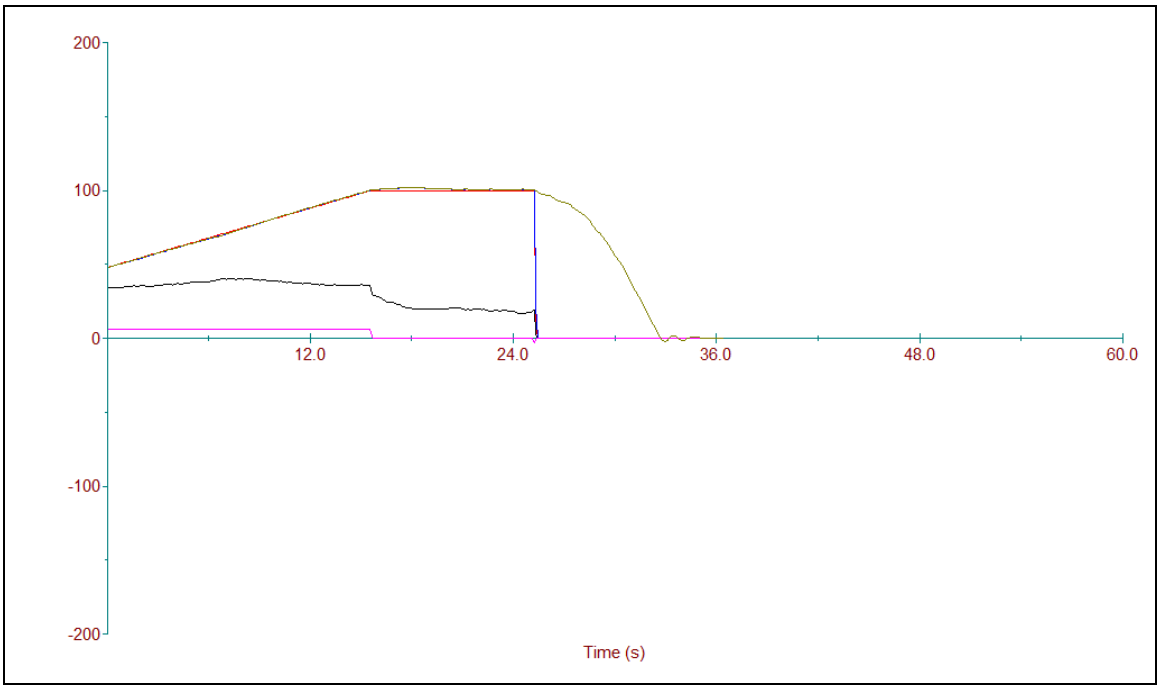
200
100
0
-100
-200
12.0
24.0
36.0
48.0
60.0
Time (s)

24. 6.1.6

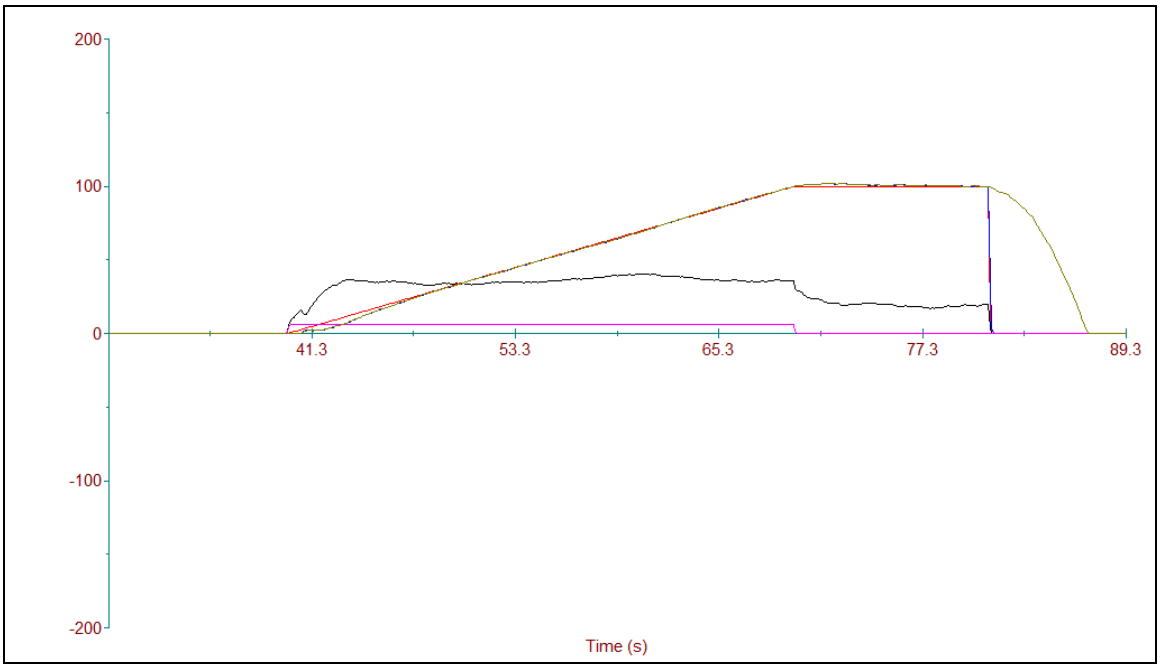

Qualified Bidder List

GONDOLA STANDYBY GENERATOR RFP QUALIFIED BIDDER LIST

Company	Contact	Email	Phone
Doppelmayr USA	Shawn Marquardt	shawn.marquardt@doppelmayrusa.com	801-973-7977
Wilson Power Systems	David Wilson	david@wipsonline.com	505-419-1119
Colorado Standby	Brad Orgill	brado@coloradostandby.com	719-264-0020
Cummins Rocky Mountain	Melissa Guillen	ah267@cummins.com	970-683-6501
CSI	Mark Allen	mallen@computersites.net	720-884-7845
R & A	Dwight Isley	dwighti@raelectric.com	970-379-5173
CAM Electric	Chris McNatt	camcnatt@aol.com	970-249-6617
Local Utility Contacts			
SMPA	Jeremy Fox	jeremy@smpa.com	970-729-1574
Black Hills Energy	Scott Hunter	scott.hunter@blackhillscorp.com	970-596-1924
Mountain Village Contacts			
Transit Director	Jim Loebe	jloebe@mtnvillage.org	970-729-3434
Gondola Maintenance Manager	Larry Forsythe	lforsythe@mtnvillage.org	970-729-3469
Public Works Director	Finn Kjome	fkjome@mtnvillage.org	970-729-3441

RFP Response Summary

GENERATOR RFP SUMMARY

VENDOR	PROPOSAL TYPE	ENGINE TYPE	COST	TIMELINE	COMMENTS
CSI	FULL NATURAL GAS EXPANDABLE - GONDOLA ONLY	CUMMINS	1,663,917	SPRING 2017	NO BI-FUEL OPTION
	FULL DIESEL EXPANDABLE - GONDOLA ONLY	CUMMINS	1,143,559		
	FULL DIESEL SINGLE ENGINE - GONDOLA ONLY	CUMMINS	1,218,491		
	FULL NATURAL GAS - RESTAURANT ONLY	CUMMINS	236,912		
	FULL DIESEL - RESTAURANT ONLY	CUMMINS	160,175		
DOPPELMAYR	FULL DIESEL EXPANDABLE- GONDOLA ONLY	GENERAC	663,443	SPRING 2017	NO RESTAURANT OPTION
	BI-FUEL EXPANDABLE - GONDOLA ONLY	GENERAC	774,482		
R&A	FULL NATURAL GAS SINGLE ENGINE - GONDOLA ONLY	CUMMINS	1,480,344	NOT LISTED	NO BI-FUEL OPTION
	FULL DIESEL SINGLE ENGINE - GONDOLA ONLY	CUMMINS	805,296		
	FULL NATURAL GAS - RESTAURANT ONLY	CUMMINS	481,999		
	FULL DIESEL - RESTAURANT ONLY	CUMMINS	299,048		
WIPS	FULL NATURAL GAS SINGLE ENGINE - GONDOLA ONLY	KOHLER	1,119,950	SPRING 2017	NO FULL DIESEL OPTION
	FULL NATURAL GAS SINGLE ENGINE - GONDOLA & RESTAURANT	KOHLER	1,289,510		
	FULL NATURAL GAS EXPANDABLE - GONDOLA ONLY	KOHLER	1,594,560		
	BI-FUEL EXPANDABLE - GONDOLA ONLY	SWP	988,148		
	BI-FUEL EXPANDABLE - GONDOLA & RESTAURANT	SWP	1,157,708		
	BI-FUEL 3 ENGINE EXPANDABLE - GONDOLA & RETAURANT	SWP	1,545,501		
	FULL NAT GAS 3 ENGINE EXPANDABLE - GONDOLA & RESTAURANT	KOHLER	2,513,670		

OVERALL COMMENTS

NONE OF THE VENDORS CAN MEET A COMPLETION DATE IN 2016. 3 OF THE 4 VENDORS RECOMMEND KEEPING THE STAND-BY POWER FEEDS FOR THE GONDOLA AND RESTAURANT SEPARATE. BI-FUEL SEEMS TO BE THE BEST OPTION. INITIAL STARTUP CAN BE ACCOMPLISHED WITH 100% DIESEL OPERATION, ALLOWING CONSTRUCTION OF SUPPLEMENTAL GAS LINE TO HAPPEN AFTER SYSTEM IS OPERATIONAL.

Fuel Type Pro / Con

FUEL TYPE PRO / CON

	PRO	CON
NATURAL GAS	EMMSIONS - ODERLESS ELIMINATES NEED TO HAUL FUEL FUEL COST LESS CURRENTLY	COST OF EQUIPMENT RELIANT ON NATURAL GAS CO LARGER FOOTPRINT FUEL VOLATILITY - EXPLOSIVE SHORTER LIFESPAN LONGEST CONSTRUCTION WINDOW
DUAL FUEL	NOT FULLY RELIANT ON EITHER FUEL OPERATING COSTS REDUCED EMMISSIONS REDUCES NEED TO HAUL FUEL SAME FOOTPRINT AS DIESEL ENGINE	ADDED UTILITY CONSTRUCTION COSTS
DIESEL	COST OF EQUIPMENT SMALLER PHYSICAL FOOTPRINT LONGER LIFESPAN SELF SUPPORTED SHORTEST CONSTRUCTION WINDOW	EMMISSIONS - ODOR FUEL STORAGE / HAULING

RFP Process Form

Town of Mountain Village RFP Process Form

General Information:

Project Title	Gondola Standby Power Generation
Release Date	7/14/2016
Deadline (Date & Time)	8/19/2016 - 5:00PM
Project Coordinator	Jim Loebe
Contact E-mail	jloebe@mtnvillage.org
Contact Phone	970-729-3434

Notification:

Notice was published in the Public Notices section of the Telluride Daily Planet, the Town's paper of record, in accordance with the Town's procurement manual. The RFP was also posted on the Town's website. Additionally, RFP was sent out via email to several industry specific vendors.

Eligible Vendor List:

Vendor #1 Name:	Computer Sites, Inc.
Date RFP was sent to Vendor	Found RFP through 3rd party
Vendor Address	1225 South Huron, Denver, CO 80223
Contact Name	Jan Schenk
Contact E-Mail	jschenk@computersites..net
Contact Phone	909-871-0550

Vendor #2 Name:	R&A Enterprises
Date RFP was sent to Vendor	Found RFP from public notice in paper
Vendor Address	3045 Aerotech Parkway, Montrose, CO 81401
Contact Name	Dwight Isley
Contact E-Mail	dwighti@raelectric.com
Contact Phone	970-379-5173

Vendor #3 Name:	Doppelmayr USA
Date RFP was sent to Vendor	7/14/2016
Vendor Address	3160 W 500 S, Salt Lake City, UT 84104
Contact Name	Randy Woolwine / Shawn Marquardt
Contact E-Mail	Randy.woolwine@doppelmayrusa.com
Contact Phone	801-973-7977

Vendor #4 Name:	WIPS LLC
Date RFP was sent to Vendor	7/14/16
Vendor Address	1140 Randolph Ave, Farmington, NM 87401
Contact Name	David Wilson
Contact E-Mail	David@wipsonlime.com
Contact Phone	505-325-9777

Proposal Review and Award:

Name	***Agency***	***Job Title***
Kevin Swain	Town of Mountain Village	Finance Director
Finn Kjome	Town of Mountain Village	Public Works Director
Larry Forsythe	Town of Mountain Village	Gondola Maint Manager
Jim Mahoney	J David Reed, P.C.	Town Attorney

Vendor #1 Name	Computer Sites, Inc.	
Criteria	***Notes***	***Score (1-5)***
Industry Reputation		4
Adequacy and Completeness	Excellent proposal but lacked bi-fuel option	4
Experience		5
Cost	Most expensive – will not fit into budget	2
<OTHER>		

Vendor #2 Name	R&A Enterprises	
Criteria	***Notes***	***Score (1-5)***
Industry Reputation	Did not furnish any references	0
Adequacy and Completeness	No bi-fuel option. Only gave options for single engine systems without any mention of expandability.	2
Experience	Did not furnish any like project data	0
Cost		3
<OTHER>		

Vendor #3 Name	Doppelmayr USA	
Criteria	***Notes***	***Score (1-5)***
Industry Reputation		4
Adequacy and Completeness	No option for restaurant power given	4
Experience		4
Cost	Most advantageous - fits into budget	5
<OTHER>		0

Vendor #4 Name	WIPS LLC	
Criteria	***Notes***	***Score (1-5)***
Industry Reputation	No references listed	3
Adequacy and Completeness	Excellent proposal as far as options listed and engine information	4
Experience	Did not furnish any like project data	4
Cost	Can't make proposals fit into budget	3
<OTHER>		

After reviewing and scoring all submitted proposals against the above mentioned criteria, the Review Committee would like to award the bid to _____Doppelmayr USA_____.

Rationale for choosing this Vendor:

Cost is the overwhelming consideration in choosing Doppelmayr USA. The project budget is $1,200,000. Their bi-fuel proposal of $775,000 leaves $425,000 for site work including engineering, design, and construction of the generator building, utility re-location, and new utility installation. All other proposals do not leave enough overhead to accomplish what is needed within the Town's budget for this project.

RFP Responses

CSI

Computer Sites Inc.
1225 South Huron
Denver, CO 80223
303.871.0550
www.ComputerSites.net

Town of Mountain Village
Request for Proposal for Gondola Standby Power Generation

Response

COVER LETTER

COMPANY BIO: CAPABILITIES, PRODUCTS & SERVICES

DATED: AUGUST 19, 2016

Company Name: Computer Sites Incorporated

Address: 1225 S. Huron, Denver, CO 80223

POC: Jan Schenck & Gary Springstead

Phone / fax: 303.871.0550 / 303.871.0515

E-mail: JSchenck@ComputerSites.net or Gary@ComputerSites.net

DUNS: 116262007 ***Tax ID:*** 84-0949017

Business Criteria: Domestic Small Business / Woman Owned

Number of Employees: 49

Capability Statement/Qualifications

Computer Sites, Inc (CSI) is a full-service turn-key integrator specializing in physical infrastructure. Founded in 1984, CSI is a specialty construction group with focus on providing products and services to meet our customer's specific needs and requirements for data center/server rooms, and other 7x24x365 mission critical facilities. Past performance includes projects ranging from just a few hundred square feet to large data centers that exceed 100,000 square feet in size with supporting **electrical and mechanical infrastructure**.

Additionally, our mainstream business includes design and building data centers and **critical power system** integration for several local and national entities including, private, public and governmental organizations.

CSI has developed a government specialty group focused on Federal, State and local government agencies. This team brings over **65 years of combined experience specializing in the federal power integration arena**.

The Company's operations support several core competencies; power and electrical services to include standby generator systems and Uninterruptible Power Systems (UPS), HVAC / Computer Room A/C mechanical systems, fire detection/suppression, raised access flooring, monitoring, maintenance/warranty services, and general construction.

CSI has a service group that operates on a 7x24x365 schedule. We also offer comprehensive maintenance contracts for all customers possessing all of the State licenses, permits, certificates and authorizations required to provide these services. All service and maintenance work is unconditionally guaranteed during the term of the agreement. CSI will remedy the condition or problem to the full satisfaction of the customer.

Proof of Bonding Capability: (Available upon request)

Available Products & Services

Computer Sites, Inc has been supporting government and commercial customers by providing the following areas of expertise:

- **Diesel Generators (portable, standby or prime)**
- **ATS (Automatic Transfer Switches)**
- **Electrical, Voltage, and Generator Controls**
- UPS (Uninterruptible Power Systems)
- PDU (Power Distribution Units)
- TVSS Surge Protection (Transient Voltage Surge Suppression)
- Transformers, panelboards and switchgear
- HVAC (Heating, Ventilation and Air Conditioning)
- General Environment
- Raised Access Flooring
- Monitoring (24 X 7)
- Maintenance of all special environmental equipment. (24 X 7)
- Computer Facilities Management Services
- Facility Assessment Services (Reliability, Coordination and Arc Flash)
- Power System Engineering Services
- Project Management
- Construction Services
- Installation & Start-up Services
- Full Turn-key Integrated Solutions
- Licensed Electrical and Mechanical Engineering available

Relevant Project Experience

(All units sold, installed and maintained)

- City of Loveland – Multiple Units
- City of Longmont (5 Units)
- Jefferson County Facilities (4 Units)
- Jefferson County Schools
- Larimer County Facilities – Multiple Units
- Keystone Ski Resort – Multiple Units
- Vail Ski Resort – Multiple Units
- Jeppesen / Boeing – Multiple Units
- National Business Center (Feds)

Contact names and phone numbers for reference available by request.

Understanding of RFP and Project Approach

We will install either natural gas or diesel stand by generator and Automatic Transfer Switch with manual controls, switch gear transformers and load bank to support the St. Sophia gondola station with an option to include the Allred's Restaurant. Provide design and engineering to install a stand by power generation system capable of running the St. Sophia gondola station in the event of the loss off utility power for both short term and long term outages. We are providing for factory startup, testing and training.

Project goals and objectives:

- Ensure that end users have input into the design process
- Accomplish project business goals and objectives within defined budget and time parameters
- Minimize impact to standard business operations of the Mountain Village gondola station

Business goals and objectives for this project will focus on implementing standby generator system with a design meeting all local code requirements.

- Improves citizen safety
- Enhances the ability and effectiveness of staff to perform their jobs
- Facilitates the emergency preparedness of the Mountain Village community in order to relocate visitors, citizens and staff off the mountain in case of a power outage

Design goals and objectives:

- Handle full capacity starting and nominal loads
- Handle full capacity regenerative loads
- System expandability in order to increase capacity
- 24 hour minimum runtime before refueling if diesel fuel is selected
- Maximum sound attenuation
- System needs to be capable of running at capacity at an elevation of 10,540 feet
- System needs to be as energy efficient as possible based on fuel selected

Fee Proposal

Option Number:	*Description:*	*Installed Total Cost:*
1	**Natural Gas generators, Paralleled with expansion capability (1525 Amps Total):** Quantity 2 - 750 GFLC - (507 kw at 10,500 ft.) Cummins Natural Gas Fueled Generator w/ 277/480V Output, Sound Attenuated Level 2 Housing with Critical Grade Exhaust Silencer (78.2 dBa at 23 ft.), 100A Load Panel, PCC3.3 Paralleling Control Panel, Qty (1) 1200A MLCB, 480V Coolant Jacket Heater, Engine Starting Batteries w/ Warming Pads & Thermostat, 10A Gen Mounted. Battery Chargers, 2 Yr./ 400 Hour Base Warranty - Manual Control Panel for Manual operation of Generator Start signals & ATS operation 4000A Bus Paralleling Switchboard, 277/480V 3-phase, Nema 3R - (3) generator breakers, Electrically Operated by the generator (only using 2 on initial build-out) - 2000 amp Feeder breaker - 2000 amp breaker for Load Bank - 100 amp Feeder Breaker to feed 200A 120/240 load after transformer 1000 kw Resistive Load bank, Freestanding, Nema 3R, 277/480V 3-phase - Automatic Loading Operation (multiple generators automatically scaled for # of Generators & kW ratings) - Automatic Loading Current Transformers - Remote-mounted wall-mounted operator interface panel o To be integrated into Cummins Manual Control station 2000 amp GE Zenith Automatic Transfer Switch (w/ manual control), 277/480V 3-Phase, 3-Pole,Nema 3R Outdoor, Auxiliary Switch Position Contacts 225 amp GE Zenith Automatic Transfer Switch (w/ manual control), 120/240v, 1-Phase, 3-Pole, Nema 3R Outdoor, Auxiliary Switch Position Contacts	***$1,663,917.00***

2	**Diesel generators, Paralleled with expansion capability (1641 amps total):** Quantity 2 - 600 DQPAA - (546 kw at 10,500 ft.) Cummins Diesel Fueled Generator with 277/480V Output, Sound Attenuated Level 2 Housing w/ Critical Grade Exhaust Silencer (75 dBa at 23 ft.), 100A Load Panel, PCC3.3 Paralleling Control Panel, Qty (1) 1200A MLCB, 480V Coolant Jacket Heater, Engine Starting Batteries w/ Warming Pads & Thermostat, 10A Gen Mounted. Battery Chargers, 2 Yr./ 400 Hour Base Warranty - Manual Control Panel for Manual operation of Generator Start signals & ATS operation 4000A Paralleling Switchboard, 277/480V 3-phase, Nema 3R - (3) generator breakers, Electrically Operated by the generator (only using 2 on initial build-out) - 2000 amp Feeder breaker - 2000 amp breaker for Load Bank - 100 amp Feeder Breaker to feed 200A 120/240 load after transformer 1000 kw Resistive Load bank, Freestanding, Nema 3R, 277/480V 3-phase - Automatic Loading Operation (multiple generators automatically scaled for # of Generators & kW ratings) - Automatic Loading Current Transformers - Remote-mounted wall-mounted operator interface panel o To be integrated into Cummins Manual Control station 2000 amp GE Zenith Automatic Transfer Switch (w/ manual control), 277/480V 3-Phase, 3-Pole,Nema 3R Outdoor, Auxiliary Switch Position Contacts 225 amp GE Zenith Automatic Transfer Switch (w/ manual control), 120/240v, 1-Phase, 3-Pole, Nema 3R Outdoor, Auxiliary Switch Position Contacts	***$1,143,559.00***
3	**Single Diesel Generator (1751 amps total):** Quantity 1 - 1250 DQGAE - (1165 kw at 10,500 ft.) Cummins Diesel Fueled Generator w/ 277/480V Output, Sound Attenuated Level 2 Housing with Critical Grade Exhaust Silencer (75 dBa at 23 f.t), 100A Load Panel, PCC3.3 Paralleling Control Panel, Qty (1) 2000A MLCB, 480V Coolant Jacket Heater, Engine Starting Batteries w/ Warming Pads & Thermostat, 10A Gen Mounted. Battery Chargers, 2 Yr./ 400 Hour Base Warranty 4000A Paralleling Switchboard, 277/480V 3-phase, Nema 3R - (3) generator breakers, Electrically Operated by the generator (only using 2 on initial build-out) - 2000 amp Feeder breaker - 2000 amp breaker for Load Bank - 100 amp Feeder Breaker to feed 200A 120/240 load after transformer 1000 kw Resistive Load bank, Freestanding, Nema 3R, 277/480V 3-phase - Automatic Loading Operation (multiple generators automatically scaled for # of Generators & kW ratings) - Automatic Loading Current Transformers - Remote-mounted wall-mounted operator interface panel o To be integrated into Cummins Manual Control station 2000 amp GE Zenith Automatic Transfer Switch (w/ manual control), 277/480V 3-Phase, 3-Pole,Nema 3R Outdoor, Auxiliary Switch Position Contacts 225 amp GE Zenith Automatic Transfer Switch (w/ manual control), 120/240v, 1-Phase, 3-Pole, Nema 3R Outdoor, Auxiliary Switch Position Contacts	***$1,218,491.00***

4 Adder	**Restaurant Natural Gas Generator (193 kw at 10,500 ft. – 670 amps):** Quantity 1 - 350 GFEB - Cummins Natural Gas Fueled Generator w/ 120/208V Output, Sound Attenuated Level 2 Housing with Critical Grade Exhaust Silencer (75 dBa at 23 ft.), 100A Load Panel, PCC3.3 Paralleling Control Panel, Qty (1) 800A MLCB, 208V Coolant Jacket Heater, Engine Starting Batteries w/ Warming Pads & Thermostat, 10A Gen Mounted. Battery Chargers, 2 Yr./ 400 Hour Base Warranty 800 amp GE Zenith Automatic Transfer Switch (with manual control), 120/208v, 1-Phase, 3-Pole, Nema 1 Indoor, Auxiliary Switch Position Contacts, & Generator Exerciser Clock	***$236,912.00***
5 Alternate to 4	**Restaurant Diesel Fueled Generator (208 kw at 10,500 f.t – 722 amps):** Quantity 1 - 300 DQHAB - Cummins Diesel Fueled Generator w/ 120/208V Output, Sound Attenuated Level 2 Housing w/ Critical Grade Exhaust Silencer (75 dBa at 23 ft.), 100A Load Panel, PCC3.3 Paralleling Control Panel, Qty (1) 2000A MLCB, 480V Coolant Jacket Heater, Engine Starting Batteries w/ Warming Pads & Thermostat, 10A Gen Mounted. Battery Chargers, 2 Yr./ 400 Hour Base Warranty 800 amp GE Zenith Automatic Transfer Switch (with manual control), 120/208v, 1-Phase, 3-Pole, Nema 1 Indoor, Auxiliary Switch Position Contacts, & Generator Exerciser Clock	***$160,175.00***
6	**300 Gallon Diesel Fuel Tank and Pump for mounting on a trailer in order to perform emergency fills.**	***$1,890.00***
Adder for Bonding	**Rates Per Option (Not 5%, but our actual rates for the project.)**	
	Option 1	***$11,750.00***
	Option 2	***$8,343.00***
	Option 3	***$8,834.00***
	Option 4	***$1,955.00***
	Option 5	***$1,320.00***

Work Schedule and Workload Capacity

We recommend a May 2017 start date. This is due to the long lead time for switch gear and load bank equipment. We can begin the design/engineering and ordering equipment this year, but due to weather conditions May would be best. We show the following schedule based on your dates in the RFP, which would have us setting equipment sometime in January of 2017. Your schedule shows a final tie-in sometime in October and project completion in November.

ID	Outline Number	Work Description	Duration	Estimated Start Date	Estimated Finish Date
01	1	Contracts	12.0 Work Days	August 24th	
02	1.1	- Review Contract Specifications with Town of Mountain Village			

03	1.2	- Finalize Contract Terms and Conditions			
04	1.3	- Execute Contract with Town of Mountain Village		September 9th	
05	2	Project Review & Revision	14.0 Days	September 12th	
06	2.1	- Review with Plans			
07	2.2	- Review with Specifications			
08	2.3	- Review with Site Plan			
09	2.4	- Review with possible Construction Drawings			
10	2.5	- Receive Approvals to Proceed		September 29th	
11	3	Material Appropriation	5 Days	September 30th	
12	3.1	- Order installation Material			
13	3.2	- Order Generator, ATS, Switch Gear, Load Bank	8-16 Week delivery	October 6th	January 19th, 2017
14	4	Site Preparation, Engineering & Building Permit		October 10th	
15	4.1	- Walk site with Representative			
16	4.2	- TMV Begin leveling area for GenSet Pad			
17	4.3	- TMV Set Forms for GenSet Slab Pour	1 Week		
18	4.4	- TMV Pull permit for inspections (No Fees Associated per TMV)			
19	4.5	- Trenching - Rough-in conduit and gas line	1 Week		
20	4.6	- Inspection of rough-in for electrical and plumbing (gas line)			
21	4.7	- TMV Pour Concrete for GenSet Slab			
22	4.8	- Back fill trenches after inspection			
23	5	Initial Rough-in Electrical - Installation	3 Weeks		November 11th, 2016
24	6	Generator Delivery	1 Week	January 19th, 2017	
25	6.1	- Set Generator(s) and secure			
26	6.2	- Complete connections of	3 Weeks		

		output feeders to ATS and Natural gas to GenSet			
27	***6.3***	***- Install Block Heater and Battery Charging circuits***			
28	***7***	***Contractor and Factory Startup***	***3 Weeks***		
29	***7.1***	***- Contractor prepare all paper work for manufacturer and schedule start-up***			
30	***7.2***	***- Factory Inspection, Start-up, Transfer Test and Customer Training***			
31	***7.3***	***Air Quality Testing (Natural Gas Option)***			
32	***8***	***Final Electrical Inspection***	***1.0 Days***	***2017***	***March, 2017***
33	***9***	***Customer Acceptance***	***1.0 Days***		***2017***

Contractor Responses to Responsibilities and Tasks:

1. All expenses associated with site visits
    a. Computer Sites and its vendors will be responsible for all expenses under our contract.
2. Coordinate with local power utility in order to determine appropriate size
    a. Computer Sites and Cummins have worked out the sizing based on current utilities and current equipment load. We will provide provisions for future expansion/addition of a generator.
3. Coordinate with local gas utility to determine feasibility of dual fuel generation
    a. We don't currently have a generator available to us capable of dual fuel
4. Provide TMV with physical size requirement for any structure housing the generator station
    a. We are providing drawings as part of our RFP submission
    b. Any additional structure requirements can be provided after contact award
5. Provide venting and exhaust requirements for any structure housing the generator station
    a. We will provide all necessary ventilation and exhaust requirements after contract award
6. Determine feasibility of providing power to adjacent building / restaurant during periods of outages. This should be a separate specific cost line item.
    a. We have determined the best solution is to provide a separate generator and ATS system.
    b. We have included its foot print in our drawings.
    c. Pricing is provided as Option 4 (natural gas) or Option 5 (diesel fuel). Includes all equipment and installation.
7. Provide as an option, the cost to provide additional, above ground bulk fuel storage

   a. We have included our fuel storage for the generators as sub-base tanks capable of 24 hours fuel storage.
8. Provide all equipment and materials associated with the generation and distribution of standby power, including, but not limited to, generators, switch gear, paralleling equipment, load banks, fuel tanks, and wiring to existing service entrance
   a. Please reference above Options 1 through 3 for pricing and equipment proposed.
   b. Computer Sites is providing all electrical and mechanical installation necessary to install any of the options provided.
   c. We include the following:
      i. All labor (Electrical and Mechanical)
      ii. Engineering / Design
      iii. **Copper Wiring**
      iv. **Copper-Wound Transformers**
      v. Delivery of installation materials to job site
      vi. Equipment delivery coordination with Town of Mountain Village
         1. Delivery to job site, with TMV responsible for off loading assistance
      vii. Diesel fuel initial fill (if Options 2,3 or 5 selected)
      viii. Factory Startup of equipment included
      ix. Factory Training
      x. Air quality testing is included
      xi. Load bank testing is included (necessary to setup parallel systems)
9. Provide all labor associated with the installation of the equipment and materials including but not limited to those listed above
   a. Included (See responses to "8.")
10. Start-up assistance
   a. Included (See responses to "8.")
11. Contractor will specify each task in the above and explain the proposed approach to the task with specific steps to accomplishment
   a. We will provide a project manager, project safety officer and a complete project schedule outlining all phases, steps and task from project beginning to end, once option an option is chosen and contracts are signed.
12. Provide customary workers compensation for its employees and furnish proof of property damage and liability insurance if awarded contract as provided below
   a. We will provide proof of workman's comp insurance and a certificate of insurance once contract is awarded.
13. Provide proof of current Town of Mountain Village Business licenses to perform contract work within Town limits if awarded contract
   a. We will comply with TMV requirements for a business license once contract is awarded.

Additional Contractor Response:

1. We have contacted the Gas Company (Scott Hunter 970-596-1924) in a request to be sure there would be enough gas to run the Natural Gas options. Their response was: He was at a walk through and he is still waiting on his Engineer to tell us for sure that they would have the gas available.
2. Under your responsibilities, you have listed "Labor and materials to load test the system upon completion"
    a. Should a Natural Gas Option be selected, we are providing load testing as part of the air quality requirements for a Natural Gas Generator.
        i. This generator set engine is capable (COMPLIANT CAPABLE) of meeting EPA SI NSPS (Spark Ignited New Source Performance Standards) 40 CFR Part 60-Standards of Performance for New Stationary and Sources (NSPS) emissions regulations. Testing performed per standards described in 40 CFR 60 Subpart JJJJ, Table 2- Requirement for Performance Test. The owner/operator of this equipment is required to conduct above referenced initial site compliance/performance emission testing and submit documentation per the EPA SI NSPS (40 CFR Part 60-Standards of Performance for New Stationary and Sources (NSPS) emissions regulations). Test consists of 3 one hour tests at 90% or greater load with 3rd party emission testing agency recording the required emission parameters (usually NOX, CO, VOC) per the above referenced standard. The above comments are NOT a complete interpretation of the standard. The owner must obtain a copy of and become familiar with the complete standard and documentation requirements as it applies to the installation/application. **The initial onsite emissions test is included in this proposal.** Note that engines over 500 HP require additional emission testing at 8760 hours or 3 years, whichever comes first.

3. **We have included load banking testing, since it is necessary to setup parallel systems.**

4. **We have included in our design breakers necessary for elevation. Please reference "Attachment S". Shows altitude derating factors for breakers per ANSI C37.20.1.**

5. **Cummins Remote Operator Panel (shown in submittal drawing)**
    <u>Sequence of operations:</u>

    Normal Operation – Utility Available & indicated by "Utility Connected" light.

    Emergency Operation – Utility will be unavailable.
    - Operator must use "Gen Start" switch to start the generators.

- Generators will start up & parallel to each other if there are multiple generators.
- Indication light for "Generators Ready to Load" will light up.
- Operator must use "Transfer ATS 1 to Gen Power– Gondola" to allow ATS 1 to transfer
- Operator must use "Transfer ATS 2 to Gen Power – Shop ATS" to allow ATS 2 to transfer

Return to Normal – Currently operating on Generators when Utility becomes available.
Once utility has returned at both ATS's for a period of time (as determined by the informed operator)

- The "Transfer ATS 2 to Gen Power – Shop ATS" toggle switch is returned to its original position. ATS 2 will automatically retransfer to utility power.
- The "Transfer ATS 1 to Gen Power – Gondola ATS" toggle switch is returned to its original position. ATS 1 will automatically retransfer to utility power.
- The "Generator Start" toggle switch is returned to its original position. Generators will continue to run for 5 minutes in a Cool Down mode then shut down automatically.

The system is in a state of readiness for the next utility outage.

6. **We have included an automatic start based on engine block low temperature. Should there be a power outage and system is not manually started. This is to prevent system from not starting when needed during cold weather. System will not come online unless activated by an operator.**

7. We have designed the system so in the future should you decide to switch over to automatic start and transfer; we can make the changes at minimal expense or no expense to Town of Mountain Village.

Acknowledgements:

Receipt of questions with answers from August 12, 2016

***Contractor:* Computer Sites, Inc.**
***Printed Name:* Jan C. Schenck**

Signature: ***Date: August 19, 2016***
***Title:* Consultant and Sales Rep.**

Attachments:

A. Drawing Layouts for Natural Gas or Diesel Solution (including Restaurant)
B. Electrical One Line for Natural Gas or Diesel Solution (including Restaurant)
C. Option 1: Cummins 750 GFLC Specifications
D. Option 1: Cummins 750 GFLC Drawing with Level 2 Housing
E. Option 2: Cummins 600 DQPAA Specification Sheet
F. Option 2: Cummins 600 DQPAA Drawing with Level 2 Housing & 1000 gal tank
G. Option 3: Cummins 1250 DQGAE Specification Sheet
H. Option 3: Cummins 1250 DQGAE Drawing with Level 2 Housing
I. Option 1-3: ESS Metron - 4000A Switchboard - Bill of Material
J. Option 1-3: Load Tec - Load Bank – Bill of Material
K. Option 4 Adder: Cummins 350 Natural Gas Spec Sheet
L. Option 4 Adder: Cummins 350 Natural Gas Drawing L2
M. Option 5 Alternate to 4: Cummins Diesel 300 DQHAB Spec Sheet
N. Option 5 Alternate to 4: Cummins Diesel 300 DQHAB Drawing Level 2 Housing & 600 gal tank
O. Cummins Remote Operator Panel
P. Cummins Sizing Data for 750s
Q. Cummins Sizing Data for 600s
R. Cummins Sizing Data for 1250
S. Square 'D' page 11 "Table 7: Altitude Derating Values Per ANSI C37.20.1 Table 10"

Attachment A

Drawing Layouts for Natural Gas or Diesel Solution (Including Restaurant)

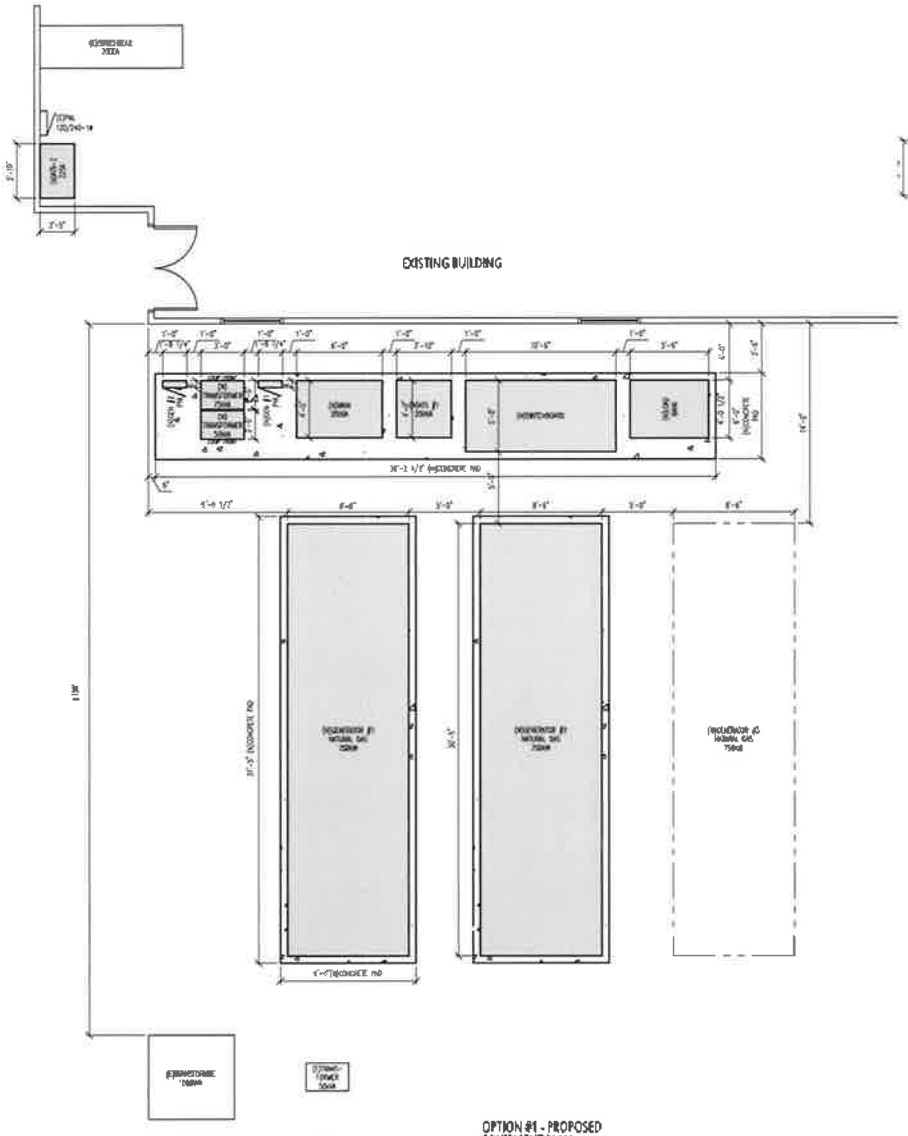

OPTION #1 - PROPOSED EQUIPMENT PLAN
SCALE 1/4"=1'-0"

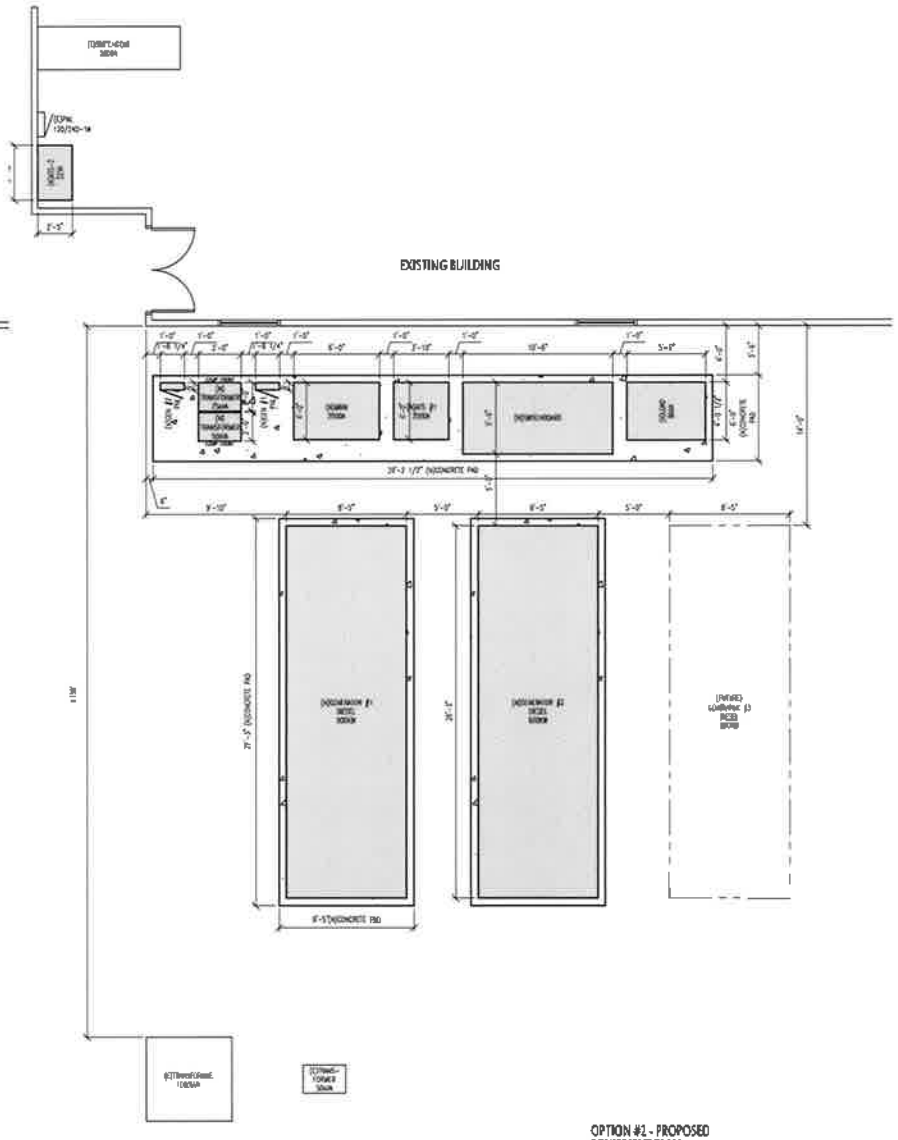

OPTION #2 - PROPOSED EQUIPMENT PLAN
SCALE 1/4"=1'-0"

COMPUTER SITES INC.
1225 SOUTH HURON
DENVER, CO 80223
303-871-0550

RESTRICTED & CONFIDENTIAL DOCUMENT

DATE	DESCRIPTION
	REVISIONS

MOUNTAIN VIEW
PROPOSED GENERATOR
& ELECTRICAL UPGRADE

CHECK BOX IF DRAWING IS NOT PRINTED TO SCALE

DATE: 4.5.16
DRAWN BY: TB
CHECKED BY: CS
DWG. SCALE: SEE SCALE
FILE NAME: [illegible]

PROJECT NO: –

SHEET TITLE: PROPOSED EQUIPMENT PLAN

SHEET NO: A1
- of -

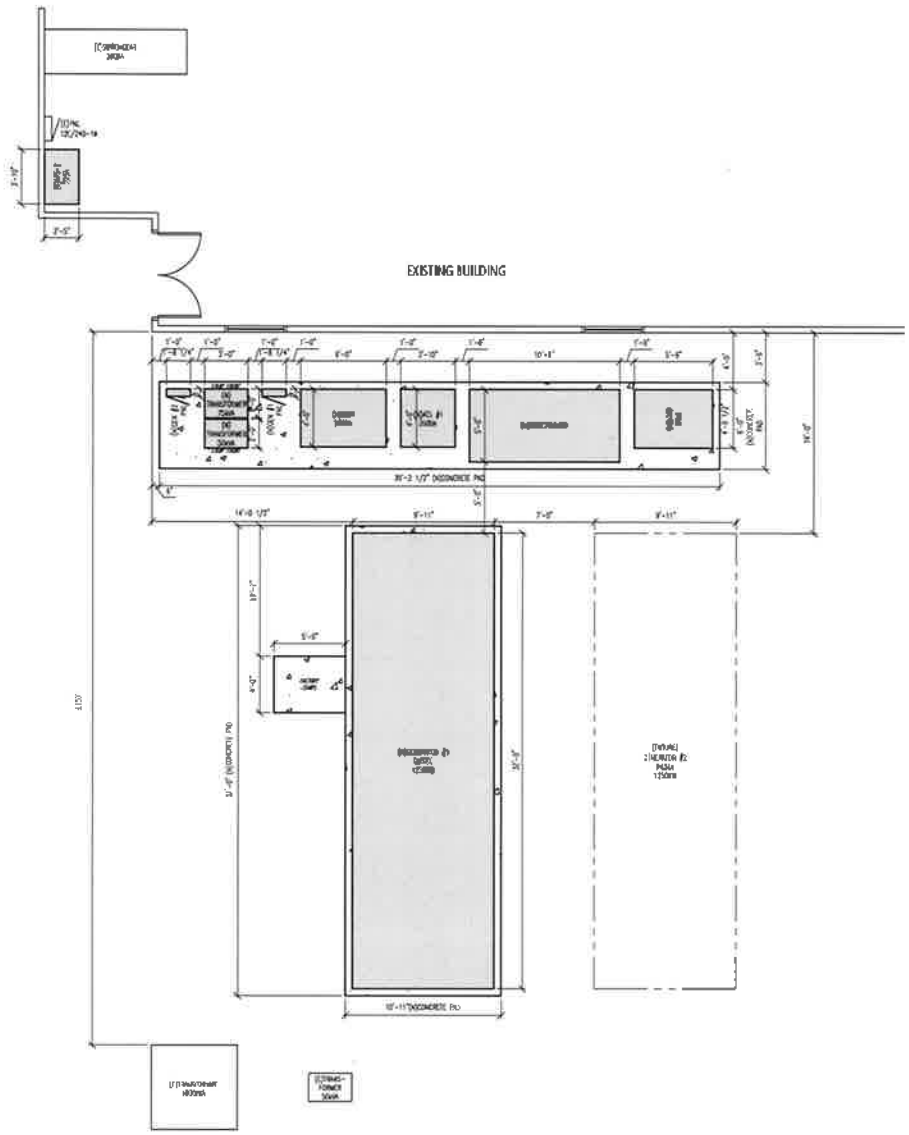

OPTION #3 - PROPOSED EQUIPMENT PLAN

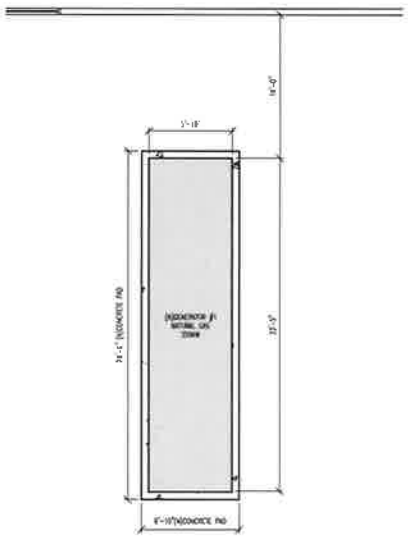

OPTION #4 - PROPOSED EQUIPMENT PLAN

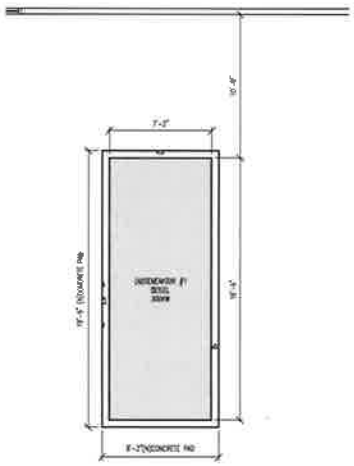

OPTION #5 - PROPOSED EQUIPMENT PLAN

COMPUTER SITES INC.
1225 SOUTH HURON
DENVER, CO 80223
303-871-0550

RESTRICTED & CONFIDENTIAL DOCUMENT

DATE	DESCRIPTION
	REVISIONS

MOUNTAIN VIEW
PROPOSED GENERATOR
& ELECTRICAL UPGRADE

CHECK BOX IF DRAWING IS NOT PRINTED TO SCALE

DATE: 2.7.16
DRAWN BY: RD
CHECKED BY: JS
ENG. SCALE: SEE SCALE
FILE NAME: MountainView-RD

PROJECT NO: –

SHEET TITLE: PROPOSED EQUIPMENT PLAN

SHEET NO: A2
- of -

Attachment B

Electrical One Line for Natural Gas or Diesel Solution (including Restaurant)

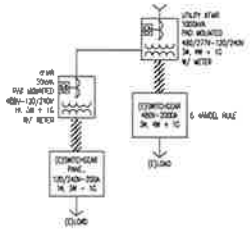

DEMOLITION ONELINE DIAGRAM
E1 SCALE NTS

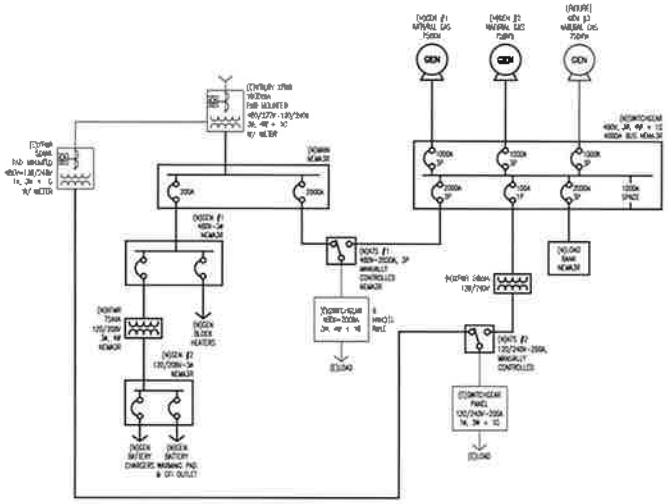

PROPOSED - OPTION #1 ONELINE DIAGRAM
E1 SCALE NTS

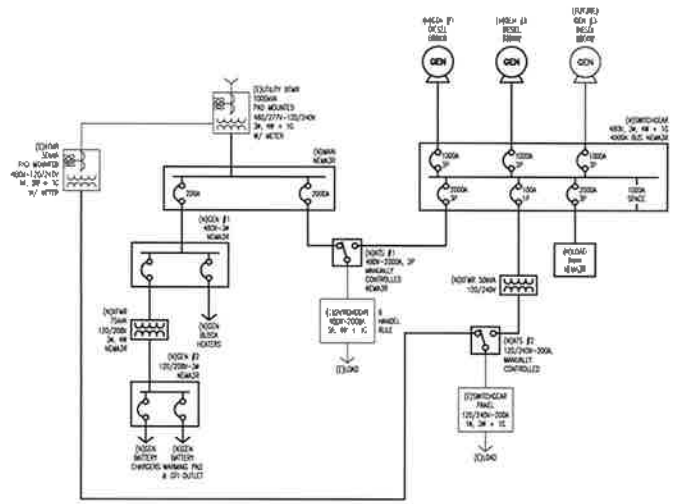

PROPOSED - OPTION #2 ONELINE DIAGRAM
E1 SCALE NTS

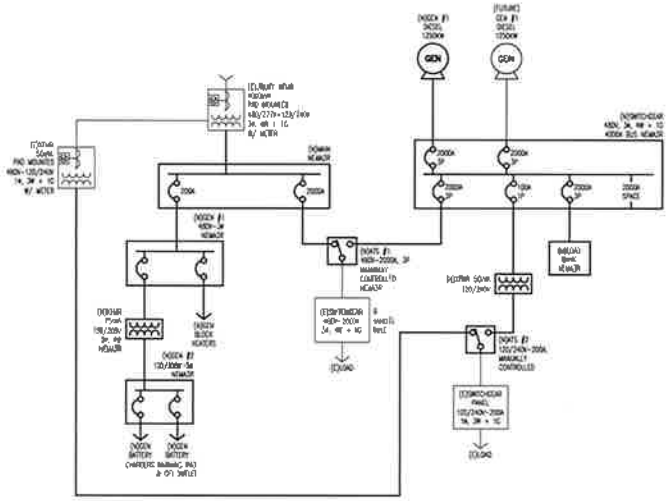

PROPOSED - OPTION #3 ONELINE DIAGRAM
E1 SCALE NTS

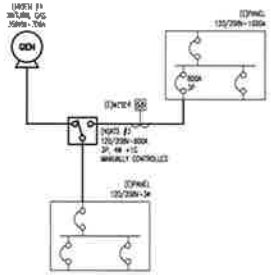

PROPOSED - OPTION #4 RESTAURANT ONELINE DIAGRAM
E1 SCALE NTS

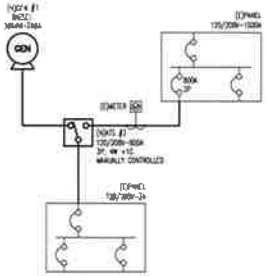

PROPOSED - OPTION #5 RESTAURANT ONELINE DIAGRAM
E1 SCALE NTS

COMPUTER SITES INC.
1225 SOUTH HURON
DENVER, CO 80223
303-871-0550

RESTRICTED & CONFIDENTIAL DOCUMENT

DATE	DESCRIPTION
	REVISIONS

MOUNTAIN VIEW
PROPOSED GENERATOR
& ELECTRICAL UPGRADE

CHECK BOX IF DRAWING IS NOT PRINTED TO SCALE

DATE: 8.3.18
DRAWN BY: [illegible]
CHECKED BY: [illegible]
DWG SCALE: DWG SCALE
FILE NAME: [illegible]

PROJECT NO: -

SHEET TITLE: PROPOSED ELECTRICAL ONELINE

SHEET NO: E1
- of -

Attachment C

Option 1: Cummins 750 GFLC Specifications

Gaseous Fuel Generator Set
GTA50 Engine Series

Specification Sheet
Model GFLC EPA SI NSPS Compliant Capable

NOTE: This engine is EPA compliant capable. A site validation emission test must be performed by the user per SI NSPS code requirements. This Generator Set must be operated as outlined in the O&M manual.

Model GFLC Ratings	
	Regulated
Speed/Frequency	1800 rpm/60 Hz
Rating	Standby
Compression Ratio	8.5:1
Natural Gas Rating @ 0.8 P.F.*	750 kW (937 kVa)
Propane Rating @ 0.8 P.F.	N/A

NOTE: 54 °C (130 °F) or lower water temperature to the aftercooler.

* Per EPA SI NSPS, rating based on commercial pipeline natural gas.

All gases such as field, digester, and sewage gas will require an analysis of the specified gas and pre-approval from the factory. Consult your Cummins Distributor for details.

Description

The Cummins NPower GF-series commercial Generator Set (GenSet) is a fully integrated power generation system providing optimum performance, reliability, and versatility for stationary standby power applications.

A primary feature of the GF-series GenSet is strong motor-starting capability and fast recovery from transient load changes. The torque-matched system includes a heavy-duty Cummins 4-cycle spark-ignited engine, an AC alternator with high motor-starting kVA capacity, and an electronic voltage regulator with three-phase sensing for precise regulation under steady-state or transient loads. The GF-series GenSet accepts 100% of the nameplate standby rating within ten seconds per NFPA 110.

The standard PowerCommand® digital electronic control is an integrated system that combines engine and alternator controls for high reliability and optimum GenSet performance.

Optional GenSet housing and component heaters shield the GenSet from extreme operating conditions.* Environmental concerns are addressed by low exhaust emission engines, sound-attenuated housings, and exhaust silencers. A wide range of options, accessories, and services are available to allow configuration to your specific power generation needs.

Every production unit is factory tested at rated load and power factor. This testing includes demonstration of rated power and single-step rated load pickup.

Cummins NPower manufacturing facilities exemplify quality standards, emphasizing our commitment to high quality in the design, manufacture, and support of our products.

GenSets are designed, manufactured, and tested to relevant codes and standards listed below.

Features

Cummins Heavy-Duty Engine - Rugged 4-cycle industrial spark-ignited engine delivers reliable power, low emissions, and quick response to load changes.

UL 2200 Certification - This Cummins GenSet has been designed, tested, and certified to UL 2200 standards.

Alternator - Several alternator sizes offer selectable motor-starting capability with low reactance 2/3 pitch windings, low waveform distortion with non-linear loads, fault-clearing short-circuit capability, and class H insulation. The alternator electrical insulation system is UL1446 Listed. The alternator is certified to CSA 22.2 and UL 1004 Listed.

AmpSentry™ - A comprehensive monitoring and control system integral to the PowerCommand® Control System, AmpSentry™ guards the electrical integrity of the alternator and power system by providing protection against a wide array of fault conditions in the GenSet or in the load. AmpSentry™ may be utilized in lieu of a main line circuit breaker.

Control Systems - The PowerCommand® electronic control is standard equipment and provides total GenSet system integration, including automatic remote starting/stopping, precise voltage regulation, alarm and status message display, output metering, and auto-shutdown at fault detection. The PowerCommand® control is UL508 Listed, as well as NFPA 110 compliant in standalone applications. The controls are certified to CSA C282-M1999 and CSA 22.2 No.14 M91.

Warranty and Service - All Cummins NPower GenSets are backed by a comprehensive one-year warranty program and supported by a worldwide network of over 200 locations to assist with warranty, service, parts, and planned maintenance support.

* Cold weather heaters are recommended when ambient temperatures are below 0 °C (32 °F).

© 2016 | Cummins Inc. | Specifications subject to change without notice

Generator Set

The general specifications provide representative configuration details. Consult the outline drawing for actual installation design specifications.

Specifications - General	
Unit Width	2515 mm (101 in) Open set
Unit Height	2744 mm (110 in) Open set
Unit Length	5182 mm (207 in) Open set
Unit Wet Weight *	10241 to 11181 kg (22530 to 24598 lbs) - Dependent on selected alternator. Open set
Rated Speed	1800 rpm
Voltage Regulation, No Load to Full Load	±1%
Random Voltage Variation	±1% (Three phase only.)
Frequency Regulation	Isochronous
Random Frequency Variation	±0.5%
Radio Frequency Interference	Optional PMG excitation operates in compliance with BS800 and VDE level G and N. Addition of RFI protection kit allows operation per MIL-STD-461 and VDE level K.

* Weight does not include silencer, catalyst, batteries, circuit breakers, or optional equipment.

Rating Definitions

Standby Rating: Applicable for supplying emergency power for the duration of the utility power outage. No overload capability is available for this rating. Under no condition is an engine allowed to operate in parallel with the public utility at the Standby Power rating. This rating should be applied where reliable utility power is available. A Standby rated engine should be sized for a maximum of an 80% average load factor and 200 hours of operation per year. This includes less than 25 hours per year at the Standby Power rating. Standby ratings should never be applied except in true emergency power outages. Negotiated power outages contracted with a utility company are not considered an emergency. (AEB 26.02)

Site Derating Factors

Unit is rated at 725 kW @ 40 °C (104 °F) ambient with derate curves for altitude and ambient temperature per FR 60244.

Unit is rated at 750 kW @ 34 °C (93 °F) ambient with derate curves for altitude and ambient temperature per FR 60244.

See GenSet enclosure specification sheet for other applicable derates.

Data represents gross engine performance capabilities obtained and corrected in accordance with SAEJ1349 conditions of 100 kPa (29.61 in. Hg) barometric pressure [110 m (361 ft.) altitude], 25 °C (77 °F) inlet air temperature, and 100 kPa (.34 in. Hg) water vapor pressure using dry processed natural gas fuel with 905 BTU per standard cubic foot (33.72 kJ/L) lower heating value. Deration may be required due to altitude, temperature, or type of fuel. Consult your local Cummins Distributor for details.

Electrical System Connection

Warning: Backfeed to a utility system can cause electrocution and/or property damage. Do not connect GenSets to any building electrical system except through an approved device or after the building main disconnect is open. Neutral connection must be bonded in accordance with National Electrical Code.

Fuel System

Standard Carburetor – IMPCO

Low Pressure Dry Processed Natural Gas – (905 BTU/ft.^{3} L.H.V.)

Running Pressure to Engine.....381 to 508 mm WC (15 to 20 in. WC)
Minimum Gas Supply Pipe Size @ Engine (NG).....50.8 mm (2.0 in.)
Gas Supply Filter Pressure Rating.....690 kPa (100psi)
The preceding pipe size is only a suggestion and piping may vary with temperature, distance from fuel supply, and application of local codes. Gas must be available at adequate volume and pressure for engine at the regulator.

The GenSet (engine) performance is based on processed natural gas fuel with 905 BTU per standard cubic foot (33.72 kJ/L) lower heating value. Variations in fuel composition and/or supply pressure must be eliminated during steady state operation. Locate the gas regulator as near to the engine as possible. Some systems may need an accumulator or other device(s) for startup or unstable conditions. Contact the fuel supply utility for details.

UL 2200-certified GenSets comply with NFPA 37 requirements, but do not include visual indication (provided by others, if required) on shutoff valves.

© 2016 | Cummins Inc. | Specifications subject to change without notice

Engine

Cummins heavy-duty spark-ignited engines use advanced combustion technology for reliable and stable power, low emissions, and fast response to sudden load changes. Electronic governing is standard for applications requiring constant (isochronous) frequency regulation such as Uninterruptible Power Supply (UPS) systems, non-linear loads, or sensitive electronic loads. Optional coolant heaters are recommended for all emergency standby installations or for any application requiring fast load acceptance after start-up.

Specifications - Engine

Base Engine	Cummins Model GTA50 CC
Displacement	50.3 L (3069 in^3)
Overspeed Limit	2100 rpm
Regenerative Power	24 kW
Cylinder Block Configuration	Cast iron with replaceable wet cylinder liners
Cranking Current	1800 CCA at ambient temperature of 0 °C (32 °F)
Battery Charging Alternator	43 amps
Battery Type	8D (x4)
Starting Voltage	24-volt, negative ground
Standard Cooling System	See derates on Page 2
Lube Oil Filter Types	Five spin-on canisters-combination full flow with bypass

Fuel Consumption

STANDBY LOAD		1/4	1/2	3/4	Full
NG Rating	kW	187.5	375	563	750
Natural Gas	CFH	2870	6172	9257	13,600
Propane Vapor	CFH	N/A	N/A	N/A	N/A
Propane Liquid	GPH	N/A	N/A	N/A	N/A

Cooling	Full Load	
Jacket Water Heat Rejection to Coolant	958 kW	(54489 BTU/min)
Aftercooler Heat Rejection to Coolant	117 kW	(6673 BTU/min)
Heat Rejection to Room	102 kW	(5791 BTU/min)
Jacket Water Coolant Capacity (w/radiator)	326 L	(85 USG)
Jacket Water Coolant Flow Rate	1809 L/min	(478 GPM)
Aftercooler Coolant Capacity (w/radiator)	182 L	(47 USG)
Aftercooler Coolant Flow Rate	386 L/min	(102 GPM)
Jacket Water Max Coolant Friction Head	34 kPa	(5 psi)
Jacket Water Max Coolant Static Head	18.3 m	(60 ft)
Radiator Fan Load	66 kW	(89 hp)

Air	Full Load	
Combustion Air	853 L/sec	(1808 cfm)
Maximum Air Cleaner Restriction	381 mm H_2O	(15 in H_2O)
Alternator Cooling Air	1614 L/sec	(3420 cfm)
Radiator Cooling Air	32517 L/sec	(68900 cfm)
Maximum Total External Restriction at Radiator (static)	12.7 mm H_2O	(0.5 in H_2O)

Exhaust	Full Load	
Gas Flow (Full Load)	2861 L/sec	(6062 cfm)
Maximum Gas Temperature - Dry Stack	672 °C	(1242 °F)
Total System Back Pressure Allowed	51 mm Hg	(2 in Hg)
Catalyst Back Pressure	7.4 mm Hg	(.29 in Hg)
Silencer Back Pressure (Factory Enclosed Units Only)	13 mm Hg	(.51 in Hg)

Engine	Full Load	
Gross Engine Power Output	921 kWm	(1235 hp)
BMEP @ Rated Load on NG	1117 kPa	(162 psi)
Piston Speed	9.5 m/sec	(1870 ft/min)
Oil Capacity (High/Low)	224 L (58.2 USG) /	194 L (50.4 USG)

© 2016 | Cummins Inc. | Specifications subject to change without notice

Alternator

Several alternators are available for application flexibility based on the required motor-starting kVA and other requirements. Larger alternator sizes have lower temperature rise for longer life of the alternator insulation system. In addition, larger alternator sizes can provide a cost-effective use of engine power in across-the-line motor-starting applications and can be used to minimize voltage waveform distortion caused by non-linear loads.

Single-bearing alternators couple directly to the engine flywheel with flexible discs for drive train reliability and durability. No gear reducers or speed changers are used. Two-thirds pitch windings eliminate third-order harmonic content of the AC voltage waveform and provide the standardization desired for paralleling of GenSets.

Separately Excited Permanent Magnet Generator (PMG) System - This option uses an integral PMG to supply power to the voltage regulator. A PMG system generally has better motor-starting performance, lower voltage dip upon load application, and better immunity from problems with harmonics in the main alternator output induced by non-linear loads. This option is recommended for use in applications that have large transient loads, sensitive electronic loads (especially UPS applications) or harmonic content, or that require sustained short-circuit current (sustained three-phase short circuit current at approximately three times rated for ten seconds).

Alternator Sizes - On any given model, various alternator sizes are available to meet individual application needs. Alternator sizes are differentiated by maximum winding temperature rise at the GenSet standby rating when operated in a 40 °C (104 °F) ambient environment. Not all temperature rise selections are available on all models. For other temperatures not listed below, contact your local Cummins distributor. Lower temperature rise is accomplished using larger alternators at lower current density. Lower temperature rise alternators have higher motor-starting kVA and lower voltage dip upon load application, and they are generally recommended to limit voltage distortion and heating due to harmonics induced by non-linear loads. An alternator space heater is recommended to inhibit condensation.

Specifications - Alternator

Design	Brushless, 4-pole, drip-proof revolving field
Stator	2/3 pitch
Rotor	Direct-coupled by flexible disc
Insulation System	Class H per NEMA MG1-1.65 or better
Standard Temperature Rise *	125 °C
Exciter Type	Permanent Magnet Generator (PMG)
Phase Rotation	A (U), B (V), C (W)
Alternator Cooling	Direct-drive centrifugal blower
AC Waveform Total Harmonic Distortion	<5% total no load to full linear load <3% for any single harmonic
Telephone Influence Factor (TIF)	<50 per NEMA MG1-22.43
Telephone Harmonic Factor (THF)	<3

	Voltage Ranges @ 60 Hz	Motor Starting Voltage	Maximum kVa (90% Sustained Voltage)	Alternator Datasheet
80 °C Alternator	120/208 Thru 139/240 240/416 Thru 277/480	Broad Range	4234	ADS312
	277/480	480	3866	ADS311
	347/600	600	3866	ADS311
105 °C Alternator	120/208 Thru 139/240 240/416 Thru 277/480	Broad Range	3866	ADS311
	277/480	480	3313	ADS310
	347/600	600	3313	ADS310
120 °C Alternator	120/208 Thru 139/240 240/416 Thru 277/480	Broad Range	3313	ADS310
	277/480	480	2944	ADS309
	347/600	600	2944	ADS309

* For UL1004 ratings, refer to temperature rise at 120 °C or below, and ambient temperature up to 40 °C

Amp Rating at Full Load Voltage

Full Load Voltage	120/240 (1 Ph)	120/208	127/220	139/240	220/380	240/416	254/440	277/480	347/600
Amps	N/A	2602	2460	2255	1424	1301	1230	1128	902

© 2016 | Cummins Inc. | Specifications subject to change without notice

Control System

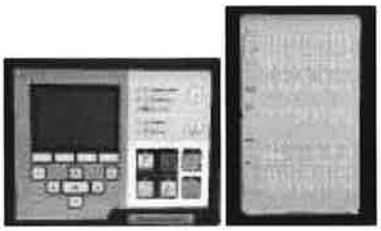

PowerCommand® Control 3.3

The PowerCommand® Control is an integrated GenSet control system providing voltage regulation, engine protection, operator interface and isochronous governing (optional). The integration of all functions into a single control system provides enhanced reliability and performance compared to conventional GenSet control systems. Prototype tested; UL, CSA, and CE compliant. The PowerCommand® Control system includes:

Environment

- Ambient operating temperature from: -40 to +70 °C (-40 to 158 °F) HMI from -20 to +70 °C (-4 to 158 °F)
- Operating altitude up to 5000 m (13,000 ft.)

Features

- Control function provides battery monitoring and testing features and smart starting control system.
- Three phase sensing, full wave rectified voltage regulation, with a PWM output for stable operation with all load types.
- **AmpSentry™** protection providing a full range of alternator protection functions matched to the alternator provided.
- Extended Paralleling (Peak Shave/Base Load) regulates the GenSet real and reactive power output while paralleled to the utility. Power can be regulated at either the GenSet or utility bus monitoring point.
- PowerCommand® Control Network (PCCNet) and Modbus® interface for interconnecting to customer equipment.

Digital Voltage Regulation

- Configurable torque matching.
- 3-phase, 4 wire line-to-line sensing.
- Integrated digital electronic voltage regulator.

Digital Governing

- Temperature dynamic governing.
- Integrated digital electronic isochronous governing.

Engine Data

- DC voltage.
- Engine speed and coolant temperature.
- 24 VDC battery configuration.
- Adjustable lube oil pressure.
- Adjustable engine idle speed.
- Lube oil pressure and temperature.
- Comprehensive FAE data (where applicable).

Alternator Data

- 60 Hz frequency.
- Three Phase AC current.
- Alternator heater status.
- Winding and bearing temperatures.
- AC: Single or three-phase line-to-line or line-to-neutral.
- Total and individual phase power factor, kW and kVA.
- Digital output voltage regulation within +/-1.0% any loads between no load to full. Drift = no more than +/-1.5% for 40 °C (104 °F) temperature change in 8 hours.

AmpSentry™ Alternator Protection

- Overload and over current warning.
- Field overload shutdown.
- AmpSentry™ protective relay.
- Over current and short circuit shutdown.
- Over and under voltage shutdown.
- Over and under frequency shutdown.
- Reverse power and reverse var shutdown.
- Single and three phase fault current regulation.

Engine Protection

- Cranking lockout.
- Overspeed shutdown.
- Sensor failure indication.
- Low fuel level warning or shutdown.
- Fail to start (overcrank) and fail to crank shutdown.
- Full authority electronic engine protection.
- Battery voltage monitoring, protection, and testing.
- Engine vitals - oil temperature and pressure, coolant temperature and levels, warning and shutdowns.

Operator/Display Panel

- Multiple language support.
- Sync check relay.
- Isochronous kW and kVar load sharing.
- Load govern control for utility paralleling.
- Extended paralleling (baseload/peak shave) mode.
- Displays paralleling breaker status.
- 320 x 240 pixels graphic LED backlight LCD.
- Provides direct control of the paralleling breaker.
- Alphanumeric display with pushbutton circuit breaker position indication and manual control.
- Auto, manual, start, stop, fault reset, and lamp test/panel lamp switches.
- LED lamps indicating GenSet running, remote start, not in auto, common shutdown, common warning, manual run mode, auto mode and stop.
- First start sensor system selects first GenSet to close to bus.
- Phase lock loop synchronizer with voltage matching.
- Digital power transfer control for use with breaker pair to provide open transition, closed transition, ramping closed transition, peaking, and base load functions.

Control Functions

- Data logging and cycle cranking.
- Load shed.
- Remote emergency stop.
- Time delay start and cooldown.
- Configurable inputs and outputs (4).
- Real time clock for fault and event time stamping.
- Exerciser clock and time of day start/stop.

Other Display Data

- GenSet hardware data.
- Fault history – up to 32 events.
- Start attempts, starts, running hours, kW hours.
- Data logs (some information requires InPower™ and fault simulation).
- Engine data – operational data, monitored status, functions, auxiliary system inputs, etc.
- Service adjustment screens - operational, customer interface, configurable set up, calibration, etc.
- Load profile (operating hours at % load in 5% increments).
- Optional PowerCommand® 3.3 control with Masterless Load Demand (MLD).

© 2016 | Cummins Inc. | Specifications subject to change without notice

ENGINE SERVICE CONNECTIONS

GAS INLET ----------2" NPT
ENGINE WATER IN ---------5.00"
ENGINE WATER OUT ---------2X 3.00"
HAND PICK-UP ----------5/8-18 UNF
OIL DRAIN PLUG ----------1.00x18x0.5
EXHAUST STACK ----------2X 6.00" O.D.
AFTERCOOLER WATER IN ----2" NPT
AFTERCOOLER WATER OUT ----1-1/2" NPT
ECM TEMP COUPLING -------2X 1/4" NPT

FLUID CAPACITIES

ENGINE OIL HIGH/LOW---------59.2/51.2 GAL
ENGINE COOLANT ----------40.5 GAL
AFTERCOOLER COOLANT -------6.0 GAL
RAD JACKET WATER ----------45.25 GAL
RAD AFTERCOOLER ----------42.09 GAL

SERVICE NOTES

21.0" REQUIRED TO REMOVE OIL DIPSTICK
3.00" REQUIRED TO REMOVE OIL FILTER

GENERATOR FRAME SIZE	DIM "A"	DIM "B"	TOTAL WEIGHT* (WET) LBS/KG
NEWAGE HCS E	97.78	38.69	28255/12806
NEWAGE HCS F	98.76	38.82	28572/12950
NEWAGE HCS G	100.31	38.54	29059/13181
NEWAGE HCS H	101.30	38.46	29390/13331
NEWAGE HCS J	102.35	38.38	29732/13486
NEWAGE HCS K	104.20	38.16	30327/13756

*SEE NOTES #1 AND #2

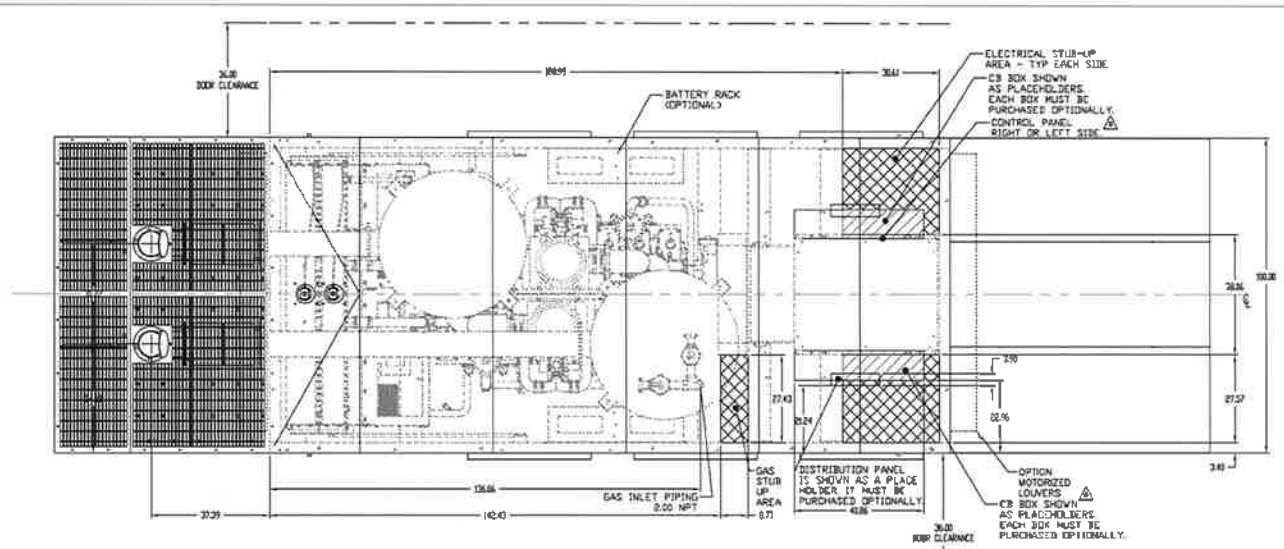

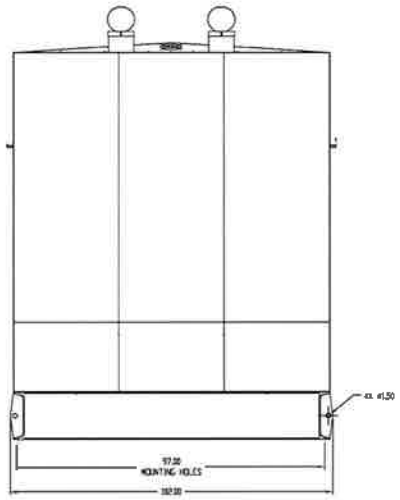

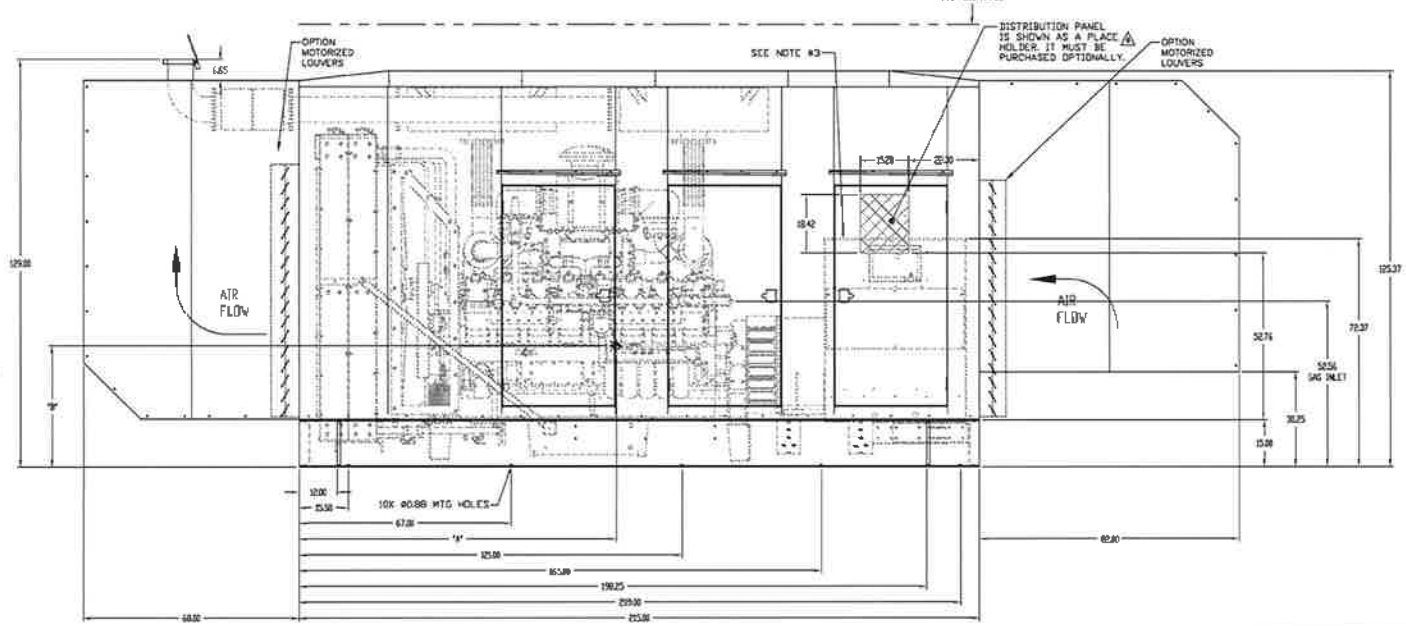

NOTES:
1. ENCLOSURE IS TO BE PAINTED GRAY GREEN UNLESS OTHERWISE NOTED ON ORDER.
2. ALL HARDWARE TO BE STAINLESS STEEL
3. ALL DOORS KEYED ALIKE
4. STAINLESS STEEL LIFT-OFF DOOR HINGES
5. FOLDING T-HANDLE COMPOSITE DOOR LATCH
6. ENCLOSURE IS 12 GUAGE
7. ALL WEIGHTS AND DIMENSIONS ARE APPROXIMATE
8. WEIGHTS DO NOT INCLUDE SILENCER, CATALYST, BATTERIES, OR OPTIONAL EQUIPMENT.
9. CONTROLLER CAN BE MOUNTED ON EITHER SIDE OF CABINET.
10. REQUIRES USE OF SPREADER BAR WHEN LIFTING UNIT TO PREVENT DAMAGE TO UNIT.
11. GENSET DOES NOT INCLUDE FLOOR. CONTACT FACTORY FOR PRICING.
12. GENSETS HAVE INTEGRAL ISOLATION

REV	DATE	DESCRIPTION OF REVISION	BY	DATE
B	2013-208	ADDED DISTRIBUTION PANEL(OPTIONAL PANEL & UPD	RAL	11APR2013
A	ECN 2012-272	ADDED ECM MODEL OPTIONS NOTE & NOTE	SJH	05AUG2013
REV	CHP	DESCRIPTION OF REVISION	BY	DATE

THIRD ANGLE PROJECTION

UNLESS OTHERWISE SPECIFIED ALL DIMENSIONS TOLERANCED AS:
DIMENSIONS IN [SPECIAL UNITS] | MEANS UNITS

ASSY,GENSET,GT,NG LVL1/LVL2 ENC,INT SIL		
DWG UNITS: INCHES/LBS/S	DRAWN BY:DVD	DATE:23AUG2010
SCALE: N/A	AUTO CAD	REF: 3D/G
EST WEIGHT:N/A	SHEET 1 OF 1	DWG NO GFLA/LB/LC-03

Attachment E

Option 2: Cummins 600 DQPAA Specification Sheet

Generator Set Options

Engine
- 240/480 V, 4000 W coolant heaters (2)
- 240 V, 300 W lube oil heater

Cooling System
- Heat exchanger cooling
- Remote radiator cooling

Fuel System
- Flexible fuel connector
- Fuel strainer

Exhaust System
- GenSet mounted muffler (enclosure models only)
- Catalyst Removal (export option)

Alternator (see Page Four for available options)

Generator Set
- AC entrance box
- Batteries
- Battery charger
- Main line circuit breaker
- PowerCommand® Network Communication Module (NCM)
- Modbus® to BACnet™ Module
- Weather protective enclosure (F001) with silencer
- Level I enclosure w/silencer
- Level II enclosure w/silencer
- Audible Alarm
- Remote Drains
- Oil Maintainer
- Remote annunciator panel
- Spring isolators
- Two-year standby warranty
- Five-year basic power warranty

Available Products and Services

A wide range of Cummins products and services is available to match your power Generation System requirements. Contact your local Cummins Distributor for more information at www.cumminsnpower.com.

- Diesel and Spark-Ignited Generator Sets
- Transfer Switches
- Bypass Switches
- Digital Paralleling Switchgear
- PowerCommand® Network and Software
- Distributor Application Support

Warranty

All Cummins GenSets are backed by a comprehensive one-year warranty program and supported by a worldwide network of over 200 locations to assist with warranty, service, parts, and planned maintenance support. Contact your local Cummins Distributor/Dealer for more information at www.cumminsnpower.com.

Certifications

CSA Group tests products under a formal process to ensure that they meet the safety and/or performance requirements of applicable standards. This GenSet is certified to: CSA 22.2 No. 100 Motors and Generators; CSA 22.2 No. 0.4-044 Bonding of Electrical Equipment; CSA 22.2 No. 14 Industrial Control Equipment; and CSA 22.2 No. 0 General Requirements - Canadian Electrical Code, Part II.

The Prototype Test Support (PTS) program verifies the performance integrity of the GenSet design. Products bearing the PTS symbol have been subjected to demanding tests in accordance with NFPA 110 to verify the design integrity and performance under both normal and abnormal operating conditions. These conditions include: short circuit, endurance, temperature rise, torsional vibration, and transient response, as well as full load pickup.

Underwriters Laboratory (UL) is a world leader in product safety testing and certification. This GenSet is certified to UL2200 as open set, weather enclosure, and sound-attenuated enclosure configurations. The generator is certified to UL1004. The PowerCommand® Control System is certified to UL508.

Manufactured By

Cummins Sales and Service
875 Lawrence Drive
DePere, WI 54115
920.337.9750
Fax: 920.337.9746
www.cumminsnpower.com

Cummins® and PowerCommand® are registered trademarks of Cummins Inc.
AmpSentry™ and InPower™ are trademarks of Cummins Inc.

Specifications subject to change without notice.

Attachment D

Option 1: Cummins 750 GFLC Drawing with Level 2 Housing

Specification sheet

Diesel generator set QSK19 series engine

EPA emissions

600 kW and 650 kW 60 Hz

Description

Cummins Power Generation commercial generator sets are fully integrated power generation systems providing optimum performance, reliability and versatility for stationary standby and prime power applications.

Features

Cummins® heavy-duty engine - Rugged 4-cycle, industrial diesel delivers reliable power, low emissions and fast response to load changes.

Alternator - Several alternator sizes offer selectable motor starting capability with low reactance 2/3 pitch windings, low waveform distortion with non-linear loads and fault clearing short-circuit capability.

Permanent magnet generator (PMG) - Offers enhanced motor starting and fault clearing short-circuit capability.

Control system - The PowerCommand® electronic control is standard equipment and provides total genset system integration including automatic remote starting/stopping, precise frequency and voltage regulation, alarm and status message display, AmpSentry™ protection, output metering, auto-shutdown at fault detection and NFPA 110 Level 1 compliance.

Cooling system - Standard integral set-mounted radiator system, designed and tested for rated ambient temperatures, simplifies facility design requirements for rejected heat.

Enclosures - Optional weather protective and sound attenuated enclosures are available.

NFPA - The genset accepts full rated load in a single step in accordance with NFPA 110 for Level 1 systems.

Warranty and service - Backed by a comprehensive warranty and worldwide distributor network.

	Standby rating		Prime rating		Continuous rating		Data sheets	
Model	60 Hz kW (kVA)	50 Hz kW (kVA)	60 Hz kW (kVA)	50 Hz kW (kVA)	60 Hz kW (kVA)	50 Hz kW (kVA)	60 Hz	50 Hz
DQPAA	600 (750)		545 (681)				NAD-5688	
DQPAB	650 (812.5)		545(681)				NAD-5752	

©2013 Cummins Power Generation Inc. | NAS-5751a-EN (6/13)

Generator set specifications

Governor regulation class	ISO 8528 Part 1 Class G3
Voltage regulation, no load to full load	± 0.5%
Random voltage variation	± 0.5%
Frequency regulation	Isochronous
Random frequency variation	± 0.25%
Radio frequency emissions compliance	IEC 801.2 through IEC 801.5; MIL STD 461C, Part 9

Engine specifications

Design	4 cycle, in-line, turbocharged and charge air aftercooled
Bore	159 mm (6.25 in)
Stroke	159 mm (6.25 in)
Displacement	19 L (1159 in^3)
Cylinder block	Cast iron, 6 cylinder
Battery capacity	1400 amps minimum at ambient temperature of 0 °C to 10 °C (32 °F to 50 °F)
Battery charging alternator	70 amps
Starting voltage	24 volt, negative ground
Fuel system	Cummins modular common rail
Fuel filter	Dual element, 10 micron filtration, spin-on fuel filters with 15 micron water separator
Air cleaner type	Dry replaceable element with restriction indicator
Lube oil filter type(s)	Fleetguard spin-on
Standard cooling system	High ambient radiator

Alternator specifications

Design	Brushless, 4 pole, revolving field
Stator	2/3 pitch
Rotor	Single bearing flexible disc
Insulation system	Class H
Standard temperature rise	125 °C standby
Exciter type	PMG (permanent magnet generator)
Phase rotation	A (U), B (V), C (W)
Alternator cooling	Direct drive centrifugal blower fan
AC waveform total harmonic distortion	< 5% no load to full linear load, < 3% for any single harmonic
Telephone influence factor (TIF)	< 50 per NEMA MG1-22.43
Telephone harmonic factor (THF)	< 3

Available voltages

60 Hz line-neutral/line-line				50 Hz line-neutral/line-line
• 110/190	• 139/240	• 240/416	• 277/480	
• 120/208	• 220/380	• 255/440	• 347/600	
• 127/220				

Note: Consult factory for other voltages.

Generator set options and accessories

Engine
- ☐ 208/240/480 V coolant heater for ambient above 4.5 °C (40 °F) and below
- ☐ Heavy duty air cleaner

Control Panel
- ☐ 120/240 V, 150 W control anti-condensation space heater
- ☐ Paralleling configurations
- ☐ Remote fault signal package
- ☐ Run relay package

Alternator
- ☐ 80 °C rise alternator
- ☐ 105 °C rise alternator
- ☐ 125 °C rise alternator
- ☐ 120/240 V, anti-condensation heater

Cooling system
- ☐ High ambient cooling system

Exhaust System
- ☐ Industrial grade exhaust silencer
- ☐ Residential grade exhaust silencer
- ☐ Critical grade exhaust silencer
- ☐ Super critical exhaust silencer

Generator set
- ☐ AC terminal box
- ☐ Batteries
- ☐ Battery rack w/hold-down - floor standing
- ☐ Circuit breaker - set mounted
- ☐ PowerCommand Network
- ☐ Remote annunciator panel
- ☐ Spring isolators
- ☐ Top entry entrance box (bottom entry entrance box std)
- ☐ 2 year warranty
- ☐ 5 year warranty
- ☐ 10 year major components warranty

Note: Some options may not be available on all models - consult factory for availability.

©2013 Cummins Power Generation Inc. | NAS-5751a-EN (6/13)

Control system 2.3

PowerCommand 2.3 control - An integrated generator set control system providing voltage regulation, engine protection, generator protection, operator interface and isochronous governing (optional).
Control - Provides battery monitoring and testing features and smart-starting control system.
InPower™ - PC-based service tool available for detailed diagnostics.
PCCNet RS485 - Network interface (standard) to devices such as remote annunciator for NFPA 110 applications.
Control boards - Potted for environmental protection.
Ambient operation - Suitable for operation in ambient temperatures from -40 °C to +70 °C and altitudes to 13,000 feet (5000 meters).
Prototype tested - UL, CSA and CE compliant.

AC protection

- AmpSentry protective relay
- Over current warning and shutdown
- Over and under voltage shutdown
- Over and under frequency shutdown
- Over excitation (loss of sensing) fault
- Field overload
- Overload warning
- Reverse kW shutdown
- Reverse Var shutdown
- Short circuit protection

Engine protection

- Overspeed shutdown
- Low oil pressure warning and shutdown
- High coolant temperature warning and shutdown
- Low coolant level warning or shutdown
- Low coolant temperature warning
- High, low and weak battery voltage warning
- Fail to start (overcrank) shutdown
- Fail to crank shutdown
- Redundant start disconnect
- Cranking lockout
- Sensor failure indication
- Low fuel level warning or shutdown
- Fuel-in-rupture-basin warning or shutdown

Operator/display panel

- Manual off switch
- 128 x 128 Alpha-numeric display with push button access for viewing engine and alternator data and providing setup, controls and adjustments (English or international symbols)
- LED lamps indicating genset running, not in auto, common warning, common shutdown, manual run mode and remote start
- Suitable for operation in ambient temperatures from -20 °C to +70 °C

Alternator data

- Line-to-neutral AC volts
- Line-to-line AC volts
- 3-phase AC current
- Frequency
- kVA, kW, power factor

Engine data

- DC voltage
- Lube oil pressure
- Coolant temperature

Other data

- Genset model data
- Start attempts, starts, running hours
- Fault history
- RS485 Modbus® interface
- Data logging and fault simulation (requires InPower service tool)
- Total kilowatt hours
- Load profile

Digital governing (optional)

- Integrated digital electronic isochronous governor
- Temperature dynamic governing

Digital voltage regulation

- Integrated digital electronic voltage regulator
- 3-phase line-to-line sensing
- Configurable torque matching
- Fault current regulation under single or three phase fault conditions

Control functions

- Time delay start and cool down
- Glow plug control (some models)
- Cycle cranking
- PCCNet interface
- (4) Configurable inputs
- (4) Configurable outputs
- Remote emergency stop
- Battle short mode
- Load shed
- Real time clock with exerciser
- Derate

Options

- ☐ Auxiliary output relays (2)
- ☐ 120/240 V, 100 W anti-condensation heater
- ☐ Remote annunciator with (3) configurable inputs and (4) configurable outputs
- ☐ PMG alternator excitation
- ☐ PowerCommand for Windows® remote monitoring software (direct connect)
- ☐ AC output analogue meters
- ☐ PowerCommand 2.3 and 3.3 control with AmpSentry protection

©2013 Cummins Power Generation Inc. | NAS-5751a-EN (6/13)

Emergency standby power (ESP):
Applicable for supplying power to varying electrical load for the duration of power interruption of a reliable utility source. Emergency Standby Power (ESP) is in accordance with ISO 8528. Fuel Stop power in accordance with ISO 3046, AS 2789, DIN 6271 and BS 5514.

Limited-time running power (LTP):
Applicable for supplying power to a constant electrical load for limited hours. Limited Time Running Power (LTP) is in accordance with ISO 8528.

Prime power (PRP):
Applicable for supplying power to varying electrical load for unlimited hours. Prime Power (PRP) is in accordance with ISO 8528. Ten percent overload capability is available in accordance with ISO 3046, AS 2789, DIN 6271 and BS 5514.

Base load (continuous) power (COP):
Applicable for supplying power continuously to a constant electrical load for unlimited hours. Continuous Power (COP) in accordance with ISO 8528, ISO 3046, AS 2789, DIN 6271 and BS 5514.

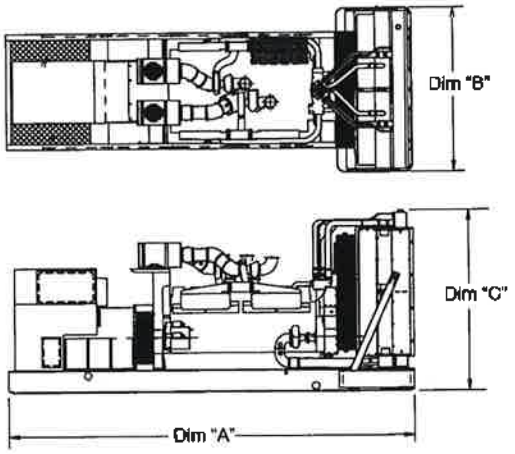

This outline drawing is for reference only. See respective model data sheet for specific model outline drawing number.

Do not use for installation design

Model	Dim "A" mm (in.)	Dim "B" mm (in.)	Dim "C" mm (in.)	Set Weight* dry kg (lbs)	Set Weight* wet kg (lbs)
DQPAA	4629 (182)	1742 (69)	2189 (86)	5211 (11488)	5352 (11799)
DQPAB	4629 (182)	1742 (69)	2189 (86)	5449 (12013)	5590 (12324)

* Weights represent a set with standard features. See outline drawings for weights of other configurations.

Codes and standards

Codes or standards compliance may not be available with all model configurations – consult factory for availability.

The Prototype Test Support (PTS) program verifies the performance integrity of the generator set design. Cummins Power Generation products bearing the PTS symbol meet the prototype test requirements of NFPA 110 for Level 1 systems.

The generator set is available listed to UL 2200, Stationary Engine Generator Assemblies. The PowerCommand control is Listed to UL 508 - Category NITW7 for U.S. and Canadian usage. Circuit breaker assemblies are UL 489 Listed for 100% continuous operation and also UL 869A Listed Service Equipment.

All low voltage models are CSA certified to product class 4215-01.

U.S. EPA Engine certified to U.S. EPA Nonroad Source Emissions Standards, 40 CFR 89, Tier 2.

This generator set is designed in facilities certified to ISO 9001 and manufactured in facilities certified to ISO 9001 or ISO 9002.

Warning: Back feed to a utility system can cause electrocution and/or property damage. Do not connect to any building's electrical system except through an approved device or after building main switch is open.

North America
1400 73rd Avenue N.E.
Minneapolis, MN 55432
USA
Phone 763 574 5000
Fax 763 574 5298

Our energy working for you.™

©2013 Cummins Power Generation Inc. All rights reserved.
Cummins Power Generation and Cummins are registered trademarks of Cummins Inc. PowerCommand, AmpSentry, InPower and "Our energy working for you." are trademarks of Cummins Power Generation. Other company, product, or service names may be trademarks or service marks of others. Specifications are subject to change without notice.

NAS-5751a-EN (6/13)

Power Generation

cumminspower.com

Attachment F

Option 2: Cummins 600 DQPAA Drawing with Level 2 Housing & 1000 gal tank

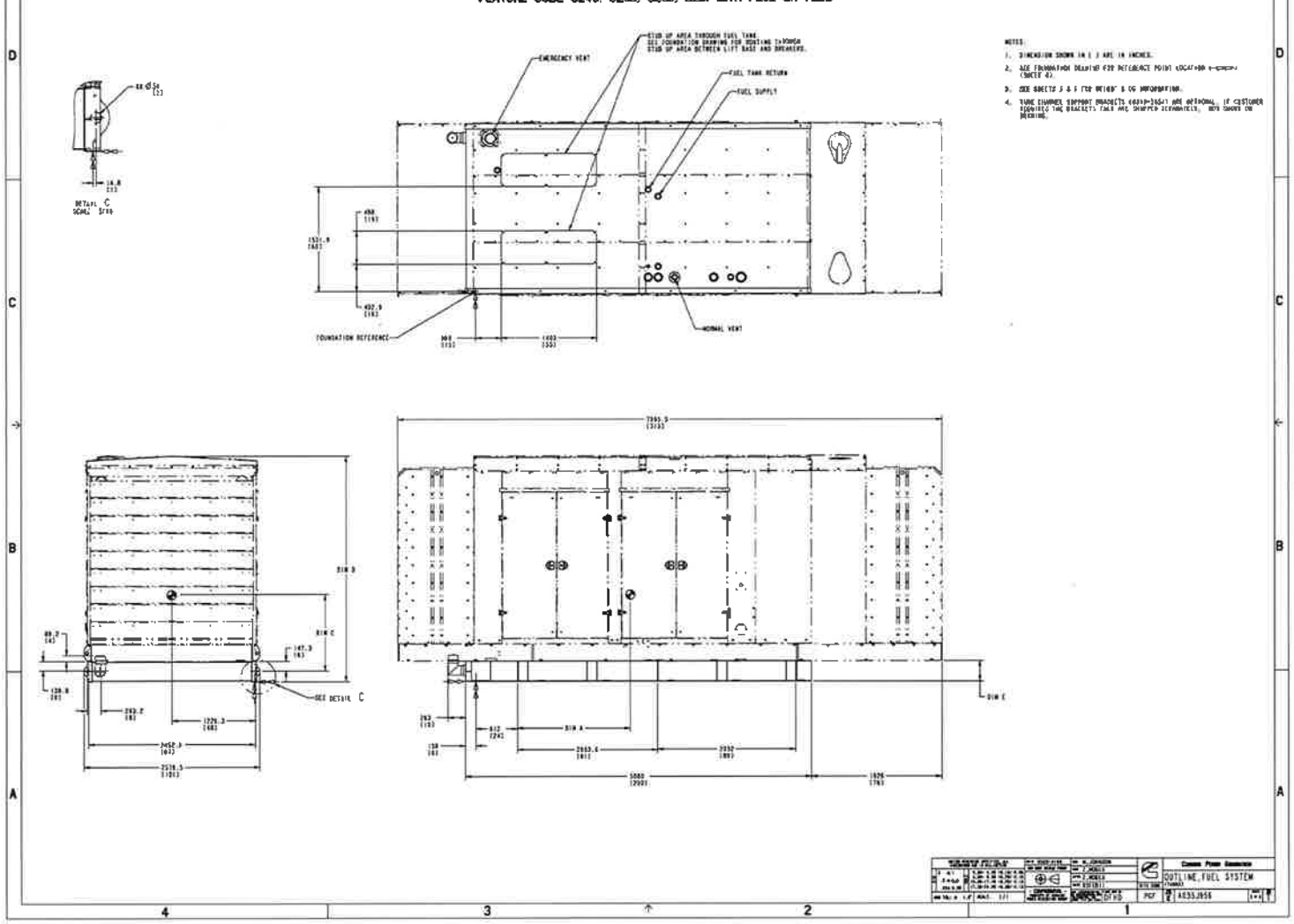

Drawing Name: A035J657 Revision: E
Part Name: A035J656 Revision: E
Sheet 3 of 5

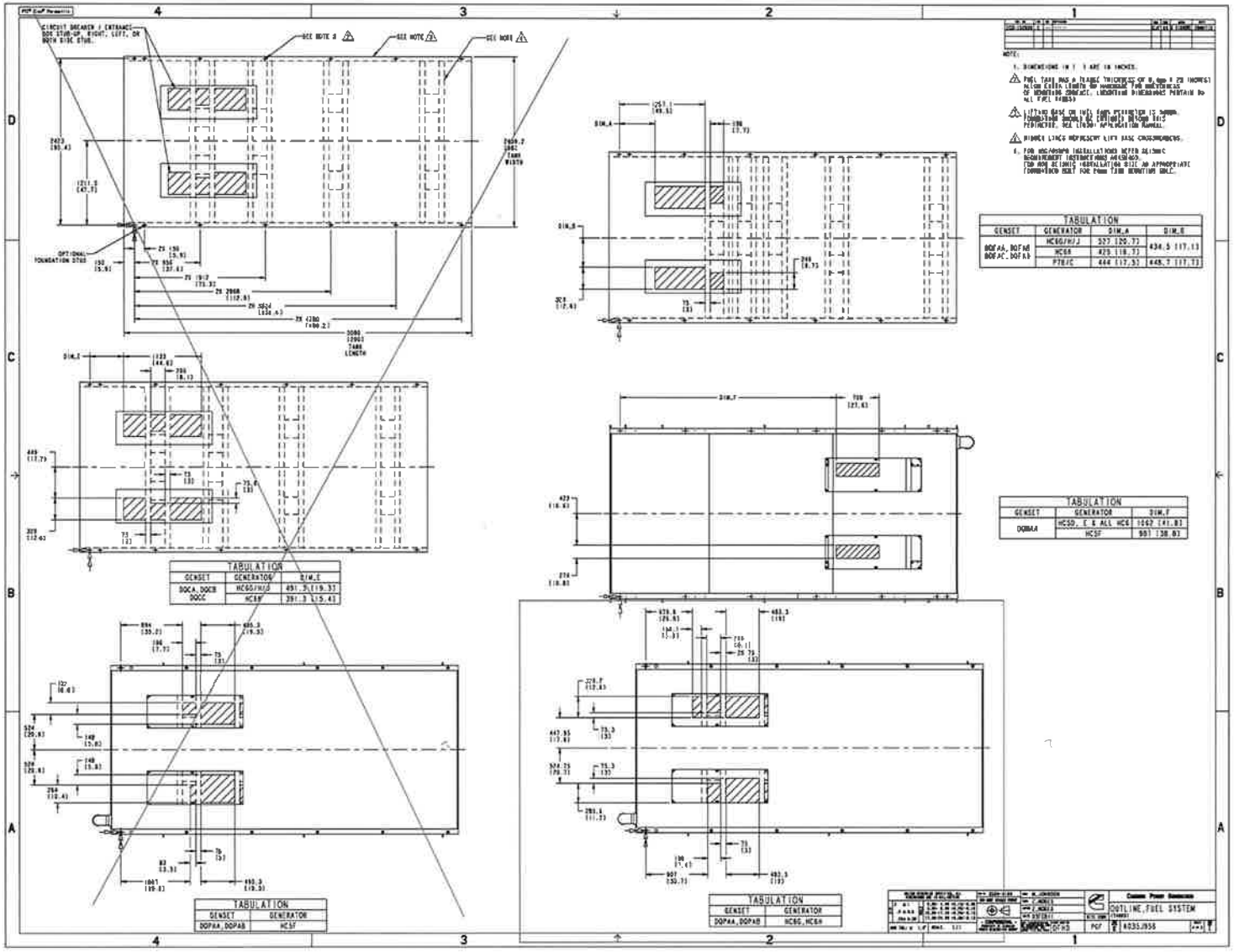

Drawing Name: A035J957 Revision: E
Part Name: A035J956 Revision: E
Sheet 4 of 6

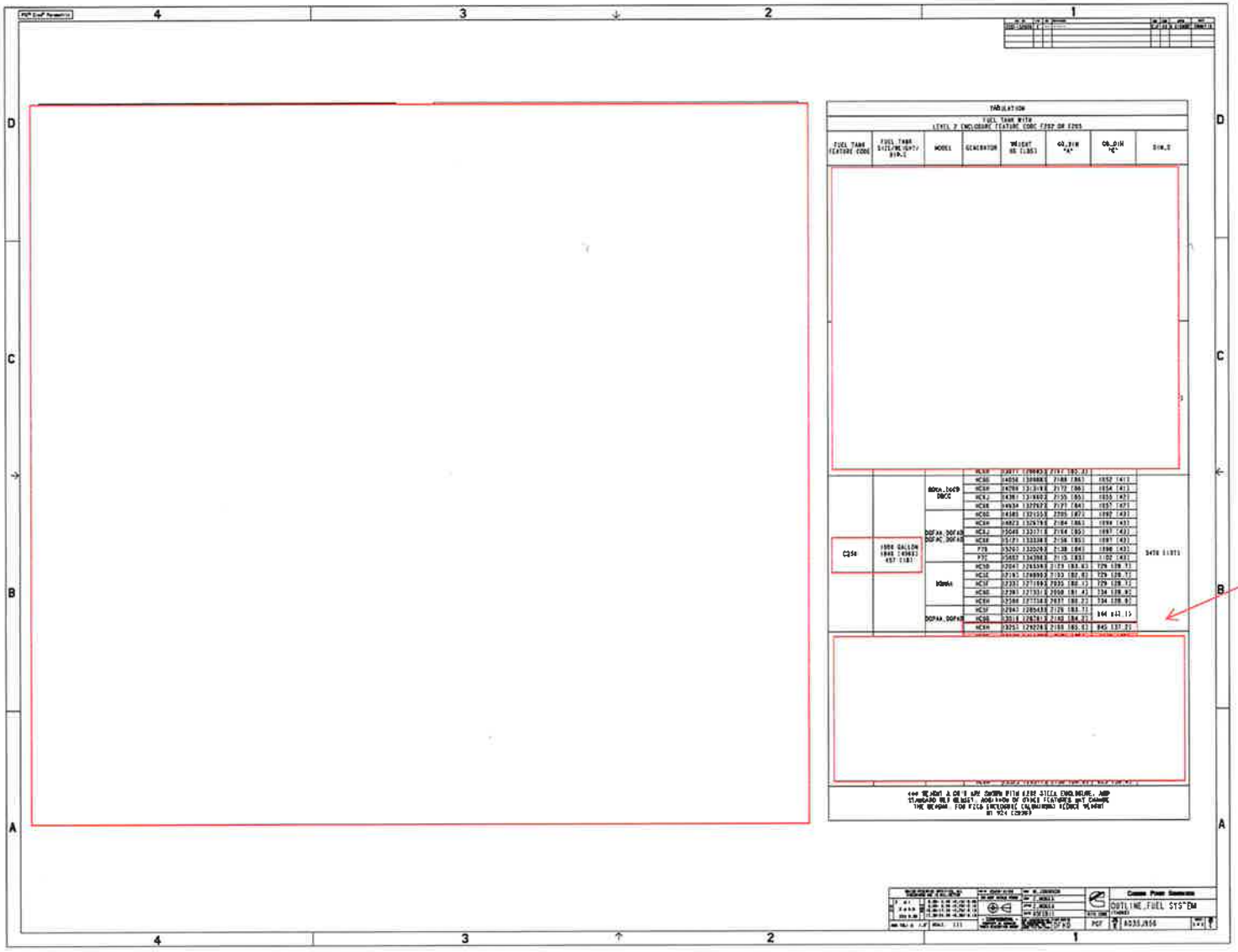

Drawing Name: A035J957 Revision: E
Part Name: A035J956 Revision: E
Sheet 5 of 6

Attachment G

Option 3: Cummins 1250 DQGAE Specification Sheet

Specification sheet

Power Generation

Diesel generator set QSK50 series engine

1135 kW-1500 kW 60 Hz EPA emissions

Description

Cummins Power Generation commercial generator sets are fully integrated power generation systems providing optimum performance, reliability and versatility for stationary standby and prime power applications.

Features

Cummins® heavy-duty engine - Rugged 4-cycle, industrial diesel delivers reliable power, low emissions and fast response to load changes.

Alternator - Several alternator sizes offer selectable motor starting capability with low reactance 2/3 pitch windings, low waveform distortion with non-linear loads and fault clearing short-circuit capability.

Permanent magnet generator (PMG) - Offers enhanced motor starting and fault clearing short-circuit capability.

Control system - The PowerCommand® digital control is standard equipment and provides total genset system integration including automatic remote starting/stopping, precise frequency and voltage regulation, alarm and status message display, AmpSentry™ protective relay, output metering, auto-shutdown at fault detection and NFPA 110 Level 1 compliance.

Cooling system - Standard and enhanced integral set-mounted radiator systems, designed and tested for rated ambient temperatures, simplifies facility design requirements for rejected heat.

NFPA - The genset accepts full rated load in a single step in accordance with NFPA 110 for Level 1 systems.

Warranty and service - Backed by a comprehensive warranty and worldwide distributor network.

	Standby rating	Prime rating	Continuous rating	Emissions compliance	Data sheets
Model	60 Hz kW (kVA)	60 Hz kW (kVA)	60 Hz kW (kVA)	EPA	60 Hz
DQGAE	1250 (1563)	1135 (1419)	1000 (1250)	EPA Tier 2	D-3488
DQGAF	1500 (1875)	1365 (1706)	1100 (1375)	EPA Tier 2	D-3489

©2012 Cummins Power Generation Inc. | S-1614a (6/12)

Generator set specifications

Governor regulation class	ISO 8528 Part 1 Class G3
Voltage regulation, no load to full load	± 0.5%
Random voltage variation	± 0.5%
Frequency regulation	Isochronous
Random frequency variation	± 0.25%
Radio frequency emissions compliance	IEC 801.2 through IEC 801.5; MIL STD 461C, Part 9

Engine specifications

Bore	159 mm (6.25 in)
Stroke	159 mm (6.25 in)
Displacement	50.3 litres (3067 in^3)
Configuration	Cast iron, V 16 cylinder
Battery capacity	1800 amps minimum at ambient temperature of 0 °C (32 °F)
Battery charging alternator	55 amps
Starting voltage	24 volt, negative ground
Fuel system	Cummins' Modular Common Rail System
Fuel filter	Two stage spin-on fuel filter and water separator system. Stage 1 has a three element 7 micron filter and Stage 2 has a three element 3 micron filter.
Air cleaner type	Dry replaceable element
Lube oil filter type(s)	Four spin-on, combination full flow filter and bypass filters
Standard cooling system	High ambient cooling system

Alternator specifications

Design	Brushless, 4 pole, drip proof, revolving field
Stator	2/3 pitch
Rotor	Single bearing, flexible disc
Insulation system	Class H
Standard temperature rise	125 °C standby / 105 °C prime
Exciter type	PMG (permanent magnet generator)
Phase rotation	A (U), B (V), C (W)
Alternator cooling	Direct drive centrifugal blower fan
AC waveform total harmonic distortion	< 5% no load to full linear load, < 3% for any single harmonic
Telephone influence factor (TIF)	< 50 per NEMA MG1-22.43
Telephone harmonic factor (THF)	< 3

Available voltages

60 Hz line-neutral/line-line

- 220/380
- 240/416
- 255/440
- 277/480
- 347/600
- 2400/4160

Note: Consult factory for other voltages.

Generator set options and accessories

Engine
- ☐ 208/240/480 V thermo-statically controlled coolant heater for ambient above and below 4.5 °C (40 °F)
- ☐ Dual 120/208/240/480 V 300 W lube oil heaters
- ☐ Heavy duty air cleaner
- ☐ Triplex fuel filter

Alternator
- ☐ 80 °C rise
- ☐ 105 °C rise
- ☐ 125 °C rise
- ☐ 150 °C rise
- ☐ 120/240 V 300 W anti-condensation heater
- ☐ Increased motor starting capabilities

Control panel
- ☐ PowerCommand 3.3
- ☐ Multiple language support
- ☐ 120/240 V 100 W control anti-condensation heater
- ☐ Exhaust pyrometer
- ☐ Ground fault indication
- ☐ Remote annunciator panel
- ☐ Paralleling relay package
- ☐ Shutdown alarm relay package
- ☐ Audible engine shutdown alarm
- ☐ AC output analog meters (bargraph

Exhaust system
- ☐ Industrial grade exhaust silencer
- ☐ Residential grade exhaust silencer
- ☐ Critical grade exhaust silencer
- ☐ Exhaust packages

Cooling system
- ☐ Remote cooling
- ☐ Enhanced high ambient temperature (50 °C)

Generator set
- ☐ Battery
- ☐ Battery charger
- ☐ Bottom entry chute
- ☐ Circuit breaker – skid mounted up to 3000 Amp
- ☐ Circuit breaker auxiliary and trip contacts
- ☐ IBC and OSHPD seismic certification
- ☐ In-skid AVM
- ☐ LV and MV entrance box
- ☐ Manual language – English, French and Spanish
- ☐ Spring isolators
- ☐ 2 year warranty
- ☐ 5 year warranty
- ☐ 10 year major components warranty

Note: Some options may not be available on all models - consult factory for availability.

Our energy working for you.™

©2012 Cummins Power Generation Inc. | S-1614a (8/12)

PowerCommand 3.3 Control System

An integrated microprocessor based generator set control system providing voltage regulation, engine protection, alternator protection, operator interface and isochronous governing. Refer to document S-1570 for more detailed information on the control.

AmpSentry – Includes integral AmpSentry protection, which provides a full range of alternator protection functions that are matched to the alternator provided.

Power management – Control function provides battery monitoring and testing features and smart starting control system.

Advanced control methodology – Three phase sensing, full wave rectified voltage regulation, with a PWM output for stable operation with all load types.

Communications interface – Control comes standard with PCCNet and Modbus interface.

Regulation compliant – Prototype tested: UL, CSA and CE compliant.

Service - InPower™ PC-based service tool available for detailed diagnostics, setup, data logging and fault simulation.

Easily upgradeable – PowerCommand controls are designed with common control interfaces.

Reliable design – The control system is designed for reliable operation in harsh environment.

Multi-language support

Operator panel features

Operator/display functions

- Displays paralleling breaker status
- Provides direct control of the paralleling breaker
- 320 x 240 pixels graphic LED backlight LCD
- Auto, manual, start, stop, fault reset and lamp test/panel lamp switches
- Alpha-numeric display with pushbuttons
- LED lamps indicating genset running, remote start, not in auto, common shutdown, common warning, manual run mode, auto mode and stop

Paralleling control functions

- First Start Sensor System selects first genset to close to bus
- Phase Lock Loop Synchronizer with voltage matching
- Sync check relay
- Isochronous kW and kVar load sharing
- Load govern control for utility paralleling
- Extended Paralleling (baseload/peak shave) Mode
- Digital power transfer control, for use with a breaker pair to provide open transition, closed transition, ramping closed transition, peaking and base load functions,

Alternator data

- Line-to-neutral and line-to-line AC volts
- 3-phase AC current
- Frequency
- kW, kvar, power factor kVA (three phase and total)

Engine data

- DC voltage
- Engine speed
- Lube oil pressure and temperature
- Coolant temperature
- Comprehensive FAE data (where applicable)

Other data

- Genset model data
- Start attempts, starts, running hours, kW hours
- Load profile (operating hours at % load in 5% increments)
- Fault history
- Data logging and fault simulation (requires InPower)

Standard control functions

Digital governing

- Integrated digital electronic isochronous governor
- Temperature dynamic governing

Digital voltage regulation

- Integrated digital electronic voltage regulator
- 3-phase, 4-wire line-to-line sensing
- Configurable torque matching

AmpSentry AC protection

- AmpSentry protective relay
- Over current and short circuit shutdown
- Over current warning
- Single and three phase fault regulation
- Over and under voltage shutdown
- Over and under frequency shutdown
- Overload warning with alarm contact
- Reverse power and reverse var shutdown
- Field overload shutdown

Engine protection

- Battery voltage monitoring, protection and testing
- Overspeed shutdown
- Low oil pressure warning and shutdown
- High coolant temperature warning and shutdown
- Low coolant level warning or shutdown
- Low coolant temperature warning
- Fail to start (overcrank) shutdown
- Fail to crank shutdown
- Cranking lockout
- Sensor failure indication
- Low fuel level warning or shutdown
- Fuel-in-rupture-basin warning or shutdown
- Full authority electronic engine protection

Control functions

- Time delay start and cool down
- Real time clock for fault and event time stamping
- Exerciser clock and time of day start/stop
- Data logging
- Cycle cranking
- Load shed
- Configurable inputs and outputs (4)
- Remote emergency stop

Options

- Auxiliary output relays (2)

©2012 Cummins Power Generation Inc. | S-1614a (6/12)

Emergency standby power (ESP):

Applicable for supplying power to varying electrical load for the duration of power interruption of a reliable utility source. Emergency Standby Power (ESP) is in accordance with ISO 8528. Fuel Stop power in accordance with ISO 3046, AS 2789, DIN 6271 and BS 5514.

Limited-time running power (LTP):

Applicable for supplying power to a constant electrical load for limited hours. Limited Time Running Power (LTP) is in accordance with ISO 8528.

Prime power (PRP):

Applicable for supplying power to varying electrical load for unlimited hours. Prime Power (PRP) is in accordance with ISO 8528. Ten percent overload capability is available in accordance with ISO 3046, AS 2789, DIN 6271 and BS 5514.

Base load (continuous) power (COP):

Applicable for supplying power continuously to a constant electrical load for unlimited hours. Continuous Power (COP) in accordance with ISO 8528, ISO 3046, AS 2789, DIN 6271 and BS 5514.

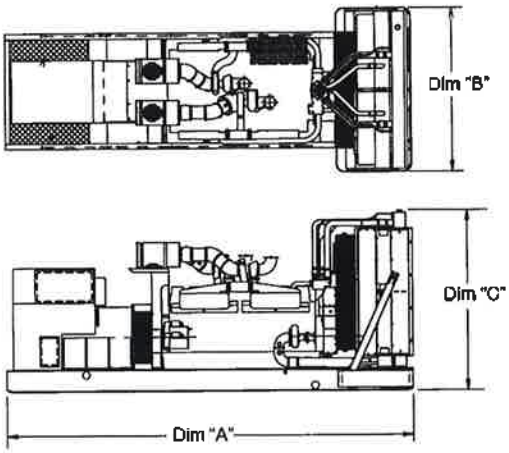

This outline drawing is for reference only. See respective model data sheet for specific model outline drawing number.

Do not use for installation design

Model	Dim "A" mm (in.)	Dim "B" mm (in.)	Dim "C" mm (in.)	Set Weight* dry kg (lbs)	Set Weight* wet kg (lbs)
DQGAE	6381 (251)	2285 (90)	2474 (97)	11293 (24897)	11926 (26292)
DQGAF	6381 (251)	2285 (90)	2474 (97)	11551 (25465)	12184 (26861)

*Note: Weights represent a set with standard features. See outline drawings for weights of other configurations.

Codes and standards

Codes or standards compliance may not be available with all model configurations – consult factory for availability.

ISO 9001	This generator set is designed in facilities certified to ISO 9001 and manufactured in facilities certified to ISO 9001 or ISO 9002.	UL	The generator set is available listed to UL 2200 for all 60 Hz low voltage models, Stationary Engine Generator Assemblies. The PowerCommand control is Listed to UL 508 - Category NITW7 for U.S. and Canadian usage. Circuit breaker assemblies are UL 489 Listed for 100% continuous operation and also UL 869A Listed Service Equipment.
PTS	The Prototype Test Support (PTS) program verifies the performance integrity of the generator set design. Cummins Power Generation products bearing the PTS symbol meet the prototype test requirements of NFPA 110 for Level 1 systems.	**U.S. EPA**	Engine certified to Stationary Emergency U.S. EPA New Source Performance Standards, 40 CFR 60 subpart IIII Tier 2 exhaust emission levels. U.S. applications must be applied per this EPA regulation.
CSA	All low and medium voltage models are CSA certified to product class 4215-01.	**International Building Code**	The genset package is certified for seismic application in accordance with the following International Building Code: IBC2000, IBC2003, IBC2006, and IBC2009.

Warning: Back feed to a utility system can cause electrocution and/or property damage. Do not connect to any building's electrical system except through an approved device or after building main switch is open.

North America
1400 73rd Avenue N.E.
Minneapolis, MN 55432
USA

Phone 763 574 5000
Fax 763 574 5298

Power Generation

"Our energy working for you."

©2012 Cummins Power Generation Inc. All rights reserved.
Cummins Power Generation and Cummins are registered trademarks of Cummins Inc. PowerCommand, AmpSentry, InPower and "Our energy working for you." are trademarks of Cummins Power Generation. Other company, product, or service names may be trademarks or service marks of others. Specifications are subject to change without notice.

S-1614a (8/12)

cumminspower.com

Attachment H

Option 3: Cummins 1250 DQGAE Drawing with Level 2 Housing

REVISIONS				
ZONE	REV	DESCRIPTION	DATE	APPROVED

WEIGHTS PER ENCLOSURE PACKAGE:
ENCLOSURE & SILENCER – 14,400lbs
FUEL TANK (DRY) – 13,500lbs
GEN WEIGHT – 26,861lbs
FUEL WEIGHT – 38,325lbs
TOTAL (WET) – 93,086lbs
TOTAL (DRY) – 54,761lbs
(THESE WEIGHTS ARE APPROXIMATE)

120" OF CLEARANCE MINIMUM REQUIRED ON REAR TO AVOID AIRFLOW RESTRICTION ON THE INLET. 40" REQUIRED ON SIDES FOR DOOR CLEARANCE.

GENERATOR SET IS DESIGNED TO BE INSTALLED IN A FREE AIR AREA. CONTACT CUMMINS ROCKY MOUNTAIN IF THIS IS NOT THE CASE.

ENCLOSURE: 4086001 (75dBA @ 50 FEET)

ENCLOSURE EXTERIOR COLOR: CUMMINS BEIGE
FUEL TANK COLOR: BLACK

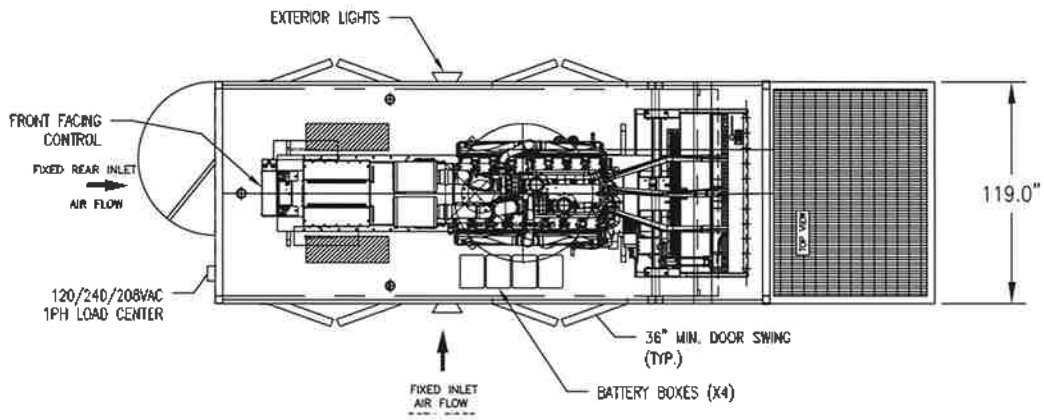

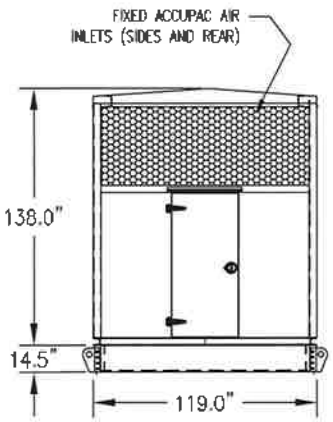

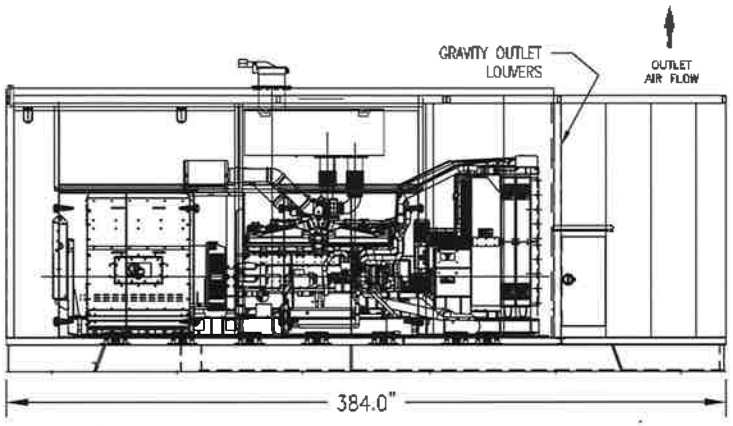

UL US LISTED
FILE MH E336241
CUMMINS ROCKY MOUNTAIN, LLC

UNLESS OTHERWISE SPECIFIED, ALL DIMS ARE IN INCHES

TOLERANCES: FRACTIONAL: 1/16 .X: .06 .XX: .03 .XXX: .01 ANGLES: .5°

REFERENCES:	PREP. BY:	CAD	05/03/16
4086001	CHKD BY:	CLS	05/03/16
	MODIFIED BY:	CAD	

FINISH: N/A

ENGINE FAMILY: QSK50

Rocky Mountain
8211 E 96th AVE
HENDERSON, COLORADO 80640
PH: 303-287-0201
FAX: 303-287-4837

SITE NAME:	CONTACT NAME:	CUSTOMER PROJECT NO:	TITLE: GENERAL ARRANGEMENT
CONTRACTOR NAME:	CONTACT NO:	CRM PROJECT NO:	SIZE B · DWG NO: P2016-1454A · REV: A · SCALE: – · DO NOT SCALE · SHEET: 1 OF 3

THIS DRAWING CONTAINS INFORMATION THAT IS PROPRIETARY TO CRM. THIS INFORMATION IS TO BE HELD IN CONFIDENCE. NO DISCLOSURE OR OTHER USE OF THIS DRAWING IS TO BE MADE WITHOUT PRIOR WRITTEN CONSENT OF CRM.

TB-B-07 REV-D

Attachment I

Option 1-3: ESS Metron - 4000A Switchboard - Bill of Material

Integrated Power Solutions

- Low & Medium Voltage Distribution
- Power Distribution Centers
- Skid-Mounted Substations
- Custom Control & Automation

ESS Metron Proposal 680690V1 LV Switchboard

DATE: August 11, 2016	SUBJECT: Telluride Mountain Village LV Switchboard
TO: MHI	FROM: Beck Jonson
ATTN: Juan Llaneza	REFERENCE: Drawings provided at time of quote

ESS Metron is pleased to offer the following proposal:

ITEM #1 4000 Amp Switchboard Lineup

ITEM #1 4000 Amp Switchboard Lineup

ELECTRICAL RATING:

- 4000Amp, 480/277VAC, 3phs, 4wire, 50Kaic
- Silver Plated Copper Main Bus
- Service Entrance Label Yes
- Switchboard UL Listed and Marked UL 891

GENERAL ENCLOSURE INFORMATION:

- Qty (4) vertical sections, NEMA 3R, floor mount
- Total Switchboard Approx Dim 92"T x 126"W x 60"D
- Switchboard material - Steel
- Finish PowderCoat - Hammer
- Color - ANSI 61 Gray
- Labels - Lamacoid - White Surface/Black letters
- Rear bolted covers
- Access covers sides
- Front doors with thumb screw hardware for circuit breaker and control device compartments
- No sticky-back or adhesive- type wire supports permitted
- Copper ground bar extending full length of cabinet
- Section heaters with thermostat – 120VAC control power by others

SECTION 101: GEN - 92"H x 30"W x 60"D

- (1) circuit breaker "52-G1": 1600AF/1000AT, 480VAC, 50Kaic, 3pole, Fixed Mount, Electrically Operated, 100% rated, with the following accessories:
  - 1000 amp rating plug
  - LSIG trip unit
  - Bell alarm w/aux contact
  - (4) Aux contacts – open/closed
  - 24VDC shunt trip
  - 120VAC closing coil
  - 120VAC motor operation
  - Standard padlocking provision
  - (2) LED pilot lights green/open red/closed
  - (6) #2-600MCM Mechanical lugs/phase - Incoming
  - (1) Set of Line Side PT's – wired out to terminal blocks

ESS Metron
1505 W. Third Ave. Denver CO 80223
Phone 303.592.1903

- (1) circuit breaker "52-G2": 1600AF/1000AT, 480VAC, 50Kaic, 3pole, Fixed Mount, Electrically Operated, 100% rated, with the following accessories:
  - 1000 amp rating plug
  - LSIG trip unit
  - Bell alarm w/aux contact
  - (4) Aux contacts – open/closed
  - 24VDC shunt trip
  - 120VAC closing coil
  - 120VAC motor operation
  - Standard padlocking provision
  - (2) LED pilot lights green/open red/closed
  - (6) #2-600MCM Mechanical lugs/phase - Incoming
  - (1) Set of Line Side PT's – wired out to terminal blocks
- (3) CT's - Load Side – wired out to terminal blocks
- (1) Shorting terminal block
- (1) Set of Load Side PT's – wired out to terminal blocks
- (1) Copper Ground Bar with (8) 4/0 Mechanical lugs
- Set of copper bus, splices, hardware, and bracing to connect the horizontal cross bus and ground bar between sections

SECTION 102: GEN - 92"H x 30"W x 60"D

- (1) circuit breaker "52-G3": 1600AF/1000AT, 480VAC, 50Kaic, 3pole, Fixed Mount, Electrically Operated, 100% rated, with the following accessories:
  - 1000 amp rating plug
  - LSIG trip unit
  - Bell alarm w/aux contact
  - (4) Aux contacts – open/closed
  - 24VDC shunt trip
  - 120VAC closing coil
  - 120VAC motor operation
  - Standard padlocking provision
  - (2) LED pilot lights green/open red/closed
  - (6) #2-600MCM Mechanical lugs/phase - Incoming
  - (1) Set of Line Side PT's – wired out to terminal blocks
- (1) circuit breaker "52-G4": 1600AF/1000AT, 480VAC, 50Kaic, 3pole, Fixed Mount, Electrically Operated, 100% rated, with the following accessories:
  - 1000 amp rating plug
  - LSIG trip unit
  - Bell alarm w/aux contact
  - (4) Aux contacts – open/closed
  - 24VDC shunt trip
  - 120VAC closing coil
  - 120VAC motor operation
  - Standard padlocking provision
  - (2) LED pilot lights green/open red/closed
  - (6) #2-600MCM Mechanical lugs/phase - Incoming
  - (1) Set of Line Side PT's – wired out to terminal blocks
- (1) Copper Ground Bar with (8) 4/0 Mechanical lugs
- Set of copper bus, splices, hardware, and bracing to connect the horizontal cross bus and ground bar between sections

SECTION 103: FEEDER - 92"H x 36"W x 60"D

- (1) ½ height group mounted interior with the following feeder breakers:
  - (1) 200A, 50Kaic, 3pole, feeder breaker
  - (1) 400A, 50Kaic, 3pole, feeder breaker
- (1) circuit breaker "52-F1": 2000AF/2000AT, 480VAC, 50Kaic, 3pole, Fixed Mount, Manually Operated, 100% rated, with the following accessories:
  - 2000 amp rating plug
  - LSIG trip unit

- Bell alarm w/aux contact
- (4) Aux contacts – open/closed
- Standard padlocking provision
- (6) #2-600MCM Mechanical lugs/phase - Outgoing

- (1) Copper Ground Bar with (2) 4/0 Mechanical lugs
- Set of copper bus, splices, hardware, and bracing to connect the horizontal cross bus and ground bar between sections

SECTION 104: LOAD BANK - 92"H x 30"W x 60"D

- (1) circuit breaker "52-LB1": 2000AF/2000AT, 480VAC, 50Kaic, 3pole, Fixed Mount, Manually Operated, 100% rated, with the following accessories:
  - 2000 amp rating plug
  - LSIG trip unit
  - Bell alarm w/aux contact
  - (4) Aux contacts – open/closed
  - Standard padlocking provision
  - (6) #2-600MCM Mechanical lugs/phase - Outgoing
- (1) Copper Ground Bar with (2) 4/0 Mechanical lugs
- Set of copper bus, splices, hardware, and bracing to connect the horizontal cross bus and ground bar between sections

EXCEPTIONS/CLARIFICATIONS:

- Coordination studies and entering of relay/breaker settings provided by others
- Any deviation from the scope of this proposal may result in a price adjustment
- Any NETA certification or testing by others
- Commissioning not included – Consult factory for commissioning rates if required
- Startup & training services available upon request. See below for rates, scheduling requirements and scope of supply
- Control power to be provided by others
- No paralleling controls are included in the SWBD – can be provided at additional cost
- Feeder breakers are quoted as manually operated -- can be provided as electrically operated at additional cost
- No freight included – to be pre-paid and added to final invoice
- Any and all SCADA integration by others
- All submittals and O&M manuals will be provided electronically only
- Standard 1 year warranty from the startup/commission date applies not to exceed 18 months from date of shipment

SHIP LOOSE ITEMS:

- N/A

ITEMS NOT INCLUDED WITHIN THE SCOPE OF THIS PROPOSAL:

- Unloading, positioning, and anchoring of the equipment is provided by others. Spreader bars and other lifting equipment to be used and provided by others.
- Commissioning and training of personnel on the equipment not provided.

Terms and Conditions:

COMMODITY METAL PRICE DISCLAIMER
Due to highly unstable commodity metal prices related to factors beyond our control, ESS Metron is unable to hold its prices firm for longer than 30 days. We are making every effort to minimize the impact of such variations and appreciate your understanding. Orders placed later than 30 days after quotation are subject to a price revision based on most current metal commodity pricing.

Shipment:	
Approval Drawings:	2-3 weeks
Manufacturing Lead Time:	6-8 weeks after release of approved dwgs
Terms:	Reference "Terms and Conditions of Sale" on the following page
FOB:	Job Site; Freight pre-paid and added to final invoice, unless noted otherwise
Validity:	Prices Valid Thirty (30) Days From the Date of This Quotation

If you have any questions or comments, please do not hesitate to contact me.

Sincerely,

Beck Jonson,
ESS Metron
bjonson@essmetron.com
Phone: 303-592-1903
www.essmetron.com

STARTUP SCOPE OF WORK:

- All inventories, inspections and tests are conducted in accordance with ESS Metron DOC # NRE11613. This document can be supplied upon request.
- **Equipment Inventory:**
  - Ship loose inventory and inspection
  - Accessory inventory and inspection
  - Equipment inventory and inspection
  - Equipment staging
- **Equipment Mechanical and Electrical Inspection:**
  - Mechanical inspection of all breakers, transformers, and ESS Metron provided equipment
  - Electrical inspection of all breakers, transformers, and ESS Metron provided equipment
  - Mechanical and electrical inspection of ESS Metron products and all internal and external equipment
- **Equipment Testing:**
  - System insulation testing
  - Power verification and Phase Sequence verification
  - System logic testing and Communication verification
  - ESS Metron product component and equipment power function testing
- **Training and Documentation:**
  - Startup documentation
  - Customer training and training documentation

Attachment J

Option 1-3: Load Tec - Load Bank – Bill of Material

LOADTEC
LOAD TECHNOLOGY,INC

QUOTATION

362231630–360745
Date: 08/11/16 Page 1 of 1

Cummins Rocky Mountain, LLC
Customer #: 10302105
8211 East 96th Avenue
Henderson, CO 80640
Attn: Nick Heimann

Tel: 303/927-2248
Fac: 303/513-7697
Email: Nick.Heimann@Cummins.com

Ref: **Tram Project-1000kW (3) Gen Scaled Loading w/Regenerative**

We are pleased to offer the following item(s) for the referenced project:

Line	Qty	Description	Net Ea.-US$
1	1	1000KW @ 480V Freestanding Resistive Load Bank with Programmable Digital Controller See Technical Description # 362231630 08/11/16 (D 28)	
2	1	INCLUDED FEATURE #1: Automatic Loading Operation - Multiple Generator Automatically Scaled for # of Generators and KW Ratings See Technical Description # 362231630 08/11/16 (D 28)	
3		**NET TOTAL including Base unit and listed features** See Technical Description # 362231630 08/11/16	
4	1	OPTION #1: Automatic Loading Current Transformers (2)CT's for installation at generator for Auto Load Function See Technical Description # 362231630 08/11/16 (D 28)	
5		*NOTE #1: The specification requires the optional Automatic Loading function. The base unit offering, Item #1, does include this operational feature and is enabled in the Load Bank Setup. To utilize the Automatic Loading function, external CT's are required to monitor the output of the generator(s). Item #2 provides those CT's if existing CT's are not available in the generating system to provide a 5A level value of the load applied to the generator.* See Technical Description # 362231630 08/11/16	

TERMS - *F.O.B.:* Factory
Freight Charges: Not Included
Payment: Net 30 Days (subject to account status)
Quote Valid Until: 11/9/2016 (90 Days)

SHIPPING - Drawings: 0 - 1 Week
Equipment: 8-10 Weeks

Thank you for the opportunity to quote the above item(s). If we can be of assistance on this quotation or any other requirements, please do not hesitate contacting our local representative or us at 1-800-LOADTEC / sales@loadtec.com

David Ballweg
Load Technology, Inc

**********SALES REPRESENTATIVE**********

McClure-Hill, Inc.
6175 N. Ponderosa Way
Parker, CO 80134
Contact: Thom Cook

Telephone: 303/805-9956
Facsimile: 303/805-9953
Email: thomcook2@att.net

****

We have detailed the equipment proposed. Load Technology will honor this quote in accordance with the Technical Description referenced. Load Technology reserves the right to correct errors & omissions before order acceptance.

BASIC UNIT

MODEL:	**OSL4v-1000.1-600V33-0600-10**
RATING:	1000 KW @ 480 V, 3∅, 3W, 60 Hz, 1.0 P.F.
RESOLUTION:	10 KW nominal load step adjustment from 0-100% of unit rating.
TOLERANCE:	0 -+5% overall tolerance, +/- 2% phase-to-phase balance
DUTY CYCLE:	Continuous
APPLICATION:	The unit has the capability of loading power sources at varying power ratings.
CONFIGURATION:	The Load Bank consists of two (2) separate items: 1) An outdoor weatherproof load enclosure containing the load resistors, power control devices, and cooling fan. 2) A Wall mounted Operator Interface Panel
ENCLOSURE:	**Load:** Outdoor Weatherproof Vertical Exhaust, Nema 3R, with bolt down provisions for permanent mounting; captive fork lifting provisions and lifting eyes for handling during installation. The enclosure is fabricated of galvanized steel that is primed and painted as described below. The top exhaust is protect with articulated cover doors automatically operated by a linear actuator controlled and power from the Digital Controller. **Control:** (1)Nema 3R/12 Wall Mounted Enclosure
PHYSICAL:	**Load Enclosure:** 96"H x 48.5"W x 66"D, 2000 LBS **Control Enclosure:** 20"H x 16"W x 8"D, 35 LBS
PAINT:	Environmentally friendly waterborne enamel **Preparation:** SSPC Surface Preparation Standards # SP1 **Primer:** Acrylic direct-to metal (DTM) primer (high solids); MIL-P-28577B and TT-P-1975 **Finish:** Premium High Performance UV Resistant Acrylic Enamel **Color:** ASA 61 Lt. Gray
AMBIENT:	**Temperature:** -20 F./-30 C. to +100 F./+40 C. **Humidity:** up to 100 % **Altitude:** 10,000 Ft / 3000 M
LOAD RESISTOR:	The Loadtec RESISTAR is designed specifically for high density applications. The resistor is continuously supported to eliminate possible shorting contact with surrounding resistors. Load resistors are mounted in trays that are independently mounted so each is removable without affecting any other tray. The RESISTAR has an industry exclusive 3 year limited warranty.
COOLING:	Forced air cooled by a TEFC motor with a direct drive airfoil propeller.
CONTROL POWER:	
Cooling Motor:	(1)10HP, 460V, 3∅, 60Hz., derived from an external facility power source or internally derived from the connected test power source. (field configurable)
Control:	24 VAC, 1∅, 60 Hz., derived from the fan power 3∅ source via a control power transformer.
CONTROL:	**Processor Control / Metering System**
Features:	∗ The control system provides integrated control and metering for the load bank ∗ Serial interface to Control Panel(s) using conventional Category 5 data cable connection. ∗ Up to (4)Control Panels can be connected on a single unit with a simple "daisy chain" wiring. ∗ Remote Control Panel(s) install with up to 1,000ft of control cabling without external control power required for the control panel. ∗ Control Module installed in the load enclosure and the OIP installed in the control panel are both upgradeable with firmware flash capability. ∗ Additional serial RS232, RS422 and RS485 ports are available for optional Modbus and optional Windows DLL external control interfaces. ∗ Ethernet port for optional TCP/IP interface functions.
Operation:	∗ The control system is accessed at the Operator Interface Panel (OIP) installed in the Control Panel ∗ The control system provides the following programmable functions: ◆ Manual Load Step Control ◆ Automatic Loading Operation ◆ Regenerative Absorption Operation ◆ Base Load Control for enhanced transfer and block load response. ◆ Automatic Exercise Operation (Internal Clock) ◆ Exercise Monitoring and Alarm Circuitry

sales@loadtec.com 525 Commerce Circle, Mesquite, NV 89027 1-800-LOADTEC

- Automatic Load Sequencing (External Exercise Clock)
- Transfer Switch position monitoring for operational logic coordination

Metering:
* The control system provides metering values on the Operator Interface Panel.
* All values are true RMS
* The metering values available for selected display:
  - Voltage each Ø-Ø, +/-1.0%
  - Voltage Average, +/-1.0%
  - Current each Ø, +/-1.0%
  - Current Average +/-1.0%
  - Frequency: 45-65 Hz, +/-0.2%
  - Kilowatts Average, +/-1.0%

Aux. Contacts:
* (4) Addressable "C" Form Auxiliary contact signals are provided. Standard Signals:.
* Generator Start – for Automatic Exercise Operation
* Exercise Failure – for Automatic Exercise Operation
* Normal Operation
* Common Failure

Operator Interface:
* Wall mounted Panel.
* The features of the system is accessed by the Operator Interface Panel.
* Serial interface to Control Panel(s) using conventional Category 5 data cable connection.
* Up to (4)Control Panels can be connected on a single unit with a simple "daisy chain" wiring.
* The panel consists of the following components:
  - LCD Graphics Display Screen
  - Control Keypad
  - Audible Input Signal
  - LED General Operational Indicators
  - Lamp & Graphical Display Test
* The LCD Display provides:
  - Soft Key Legend
  - Metering display
  - Operational Mode
  - Operational status and alarm condition details

PROTECTIVE SYSTEM

Cooling: A temperature & air flow sensors monitors cooling and disconnects the unit on failure.

Voltage: Voltage monitoring circuits monitor for connected sources and alarms and disconnects on faults.

Cooling Motors: Thermal overload relays with thermal magnetic circuit breaker for protection and disconnect.

FUSES: Fuse protection is provided for each individual load section and control circuit.

POWER CONTROL: The load is controlled by contactors that are applied for continuous and cycling operation.

MANUALS: (2) As built drawing manuals are provided at time of shipment.

WARRANTY: Tier 1 Standard Limited Warranty

INCLUDED FEATURE #1:MULTIPLE GENERATOR scaled Auto Loading Operation w/Regenerative Sensing

AUTOMATIC LOADING: The Programmable Digital Control (PDC) System is configured to provided scaled Automatic Loading Functions of multiple paralleled generators.

- The scaling is automatically adjusted depending on the number and rating of the generator connect to the source bus.
- Each generator requires a breaker auxiliary contact to signal the PDC of the generator connection to the source bus.
- Current transformers installed at the main source bus or multiple CT's at each generator output.
- The PDC provided adjustment for percentage of minimum load of connected source plus selection of loading and un-loading response curves.

NOTE #1: The load bank circuit breaker is not included in this proposal. The load bank circuit breaker must be installed at the generator switchgear or generator junction box to protect both the load bank and cabling. A circuit breaker in the load bank will not meet code requirements for connection.

OPTION #1: CURRENT TRANSFORMERS (CTa)

Current Transformer: (2) Current transformer for installation at generator for the Automatic Loading function. The CT's are only required if the Automatic Loading function is implemented as a Load Bank function. These CT's are installed in the generator junction box or switchgear and need to sense the entire generator load including the Load Bank. Any CT with 5A secondary can be used as long as it is rated at least the full load amperage rating of the generator or larger.

sales@loadtec.com 525 Commerce Circle, Mesquite, NV 89027 1-800-LOADTEC

LOADTEC
LOAD TECHNOLOGY, INC

LIMITED WARRANTY
Terms & Pricing
ID#: Warranty_Price_03272013

TIER #1: Standard Limited Warranty — **included in product's base quoted price**

LOADTEC, Load Technology Inc., warrants that its products are free from defects in material and/or workmanship under normal use and service. Its liability under this Warranty Tier shall be limited to twelve (12) months from date of shipment for products and/or components except as noted:

(3)Year Term Items (included in Standard level)

- The "RESISTAR" Load Resistor assemblies as manufactured by Loadtec. These assemblies have the Warranty term extended to a total of thirty-six (36) months from the date of shipment. The "RESISTAR" Load Resistor assemblies warranty is limited to the failure of the alloy wire, its termination, and workmanship of the assembly. Physical damage or breakage is not covered. All other terms of the Tier #1 Warranty apply.
- The digital electronic control assemblies that are manufactured by Loadtec. These components and assemblies have the Warranty term extended to total of thirty-six (36) months from the date of shipment. All other terms of the Standard Warranty apply.

The warranty liability is limited to repair, refurbishing, or replacement; at LOADTEC's sole discretion, at the factory or authorized service station. The products and/or components shall be returned with transportation costs **prepaid**. Returned products and/or components that are determined defective and within the warranty period will be repaired or replaced, and returned F.O.B. factory or repair station, freight charges **collect**. Authorization to return must be obtained prior to receipt at the factory by contacting Loadtec Service Department. The delivery of any unauthorized returned Products shall be refused.

This warranty does not cover incidental and consequential damages, nor does this warranty cover defects caused by abuse, improper use, improper installation, improper connection, lack of reasonable maintenance, modifications, shipping damage, or accident. This Standard Warranty Tier does not included any labor charges, service charges, or any liability except repair or replacement of the products and/or components as previously described and governed by the General Conditions section.

TIER #1a: 2 Years *without* Labor Limited Warranty — **5% of Sales Price (not less then $250)**

LOADTEC, Load Technology Inc., offers this Tier #1a Warranty as an option to the Tier #1, Standard Warranty as previously described. The terms of the Tier #1 Standard apply plus the addition of one 12 months to the basic 12 month term for a total of (24) months from date of shipment. This Tier 1a Limited Warranty does not included any labor charges, service charges, or any liability except repair or replacement of the products and/or components as previously described and governed by the General Conditions section.

TIER #1b: 1 Year with Labor Limited Warranty — **5% of Sales Price (not less then $250)**

LOADTEC, Load Technology Inc., offers this Tier #1b Warranty as an option to the Tier #1, Standard Warranty as previously described. The terms of the Tier #1 Standard apply plus the addition of labor costs to accomplish repair. The labor cost may be provided in the form of a technician dispatched from the factory or a locally dispatched independent service company's personnel. If the damage is deemed not repairable on the site, the Warranty will cover removal and transportation cost to the factory and return to the site. The remedy shall be the sole discretion of Loadtec. The entity making the Warranty claim shall make available to the Service Department of Load Technology, the person at the site who has working knowledge of the equipment and has reported the claim. This person will be required to provide details of the claim with preliminary data and readings to evaluate the validity of the claim. If it is found later that the supplied data is not accurate, and the claim is not covered by this Warranty, the entity making the claim will be charged and held responsible for costs incurred that will include, but not limited to: labor, transportation, lodging, and material costs. This Warranty option is governed by the General Condition section of this document.

TIER #2: 2 Years with Labor Limited Warranty — **10% of Sales Price (not less then $500)**

LOADTEC, Load Technology Inc., offers this Tier #2 Warranty as an option to the Tier #1, Standard Warranty as previously described. The terms of the Tier #1 Standard apply plus the addition of labor costs to accomplish repair. The term of the Tier #2 warranty is two (2) years from the date of shipment from the factory. The labor cost may be provided in the form of a technician dispatched from the factory or a locally dispatched independent service company's personnel. If the damage is deemed not repairable on the site, the Warranty will cover removal and transportation cost to the factory and return to the site. The remedy shall be the sole discretion of Loadtec. The entity making the Warranty claim shall make available to the Service Department of Load Technology, the person at the site who has working knowledge of the equipment and has reported the claim. This person will be required to provide details of the claim with preliminary data and readings to evaluate the validity of the claim. If it is found later that the supplied data is not accurate, and the claim is not covered by this Warranty, the entity making the claim will be charged and held responsible for costs incurred that will include, but not limited to: labor, transportation, lodging, and material costs. This Warranty option is governed by the General Condition section of this document.

TIER #3: 3 Years with Labor Limited Warranty — **15% of Sales Price (not less then $750)**

LOADTEC, Load Technology Inc., offers this Tier #3 Limited Warranty as an option to the Tier #1, Standard Limited Warranty as previously described. The terms of the Tier #1 Standard Limited Warranty apply plus the addition of labor costs. The terms of the Tier #3 Limited Warranty are the same as the Tier #2 Limited Warranty with the only exception being the term being three (3) years from the date of shipment from the factory.

TIER #4: 4 Years with Labor Limited Warranty — **20% of Sales Price (not less then $1000)**

LOADTEC, Load Technology Inc., offers this Tier #4 Limited Warranty as an option to the Tier #1, Standard Limited Warranty as previously described. The terms of the Tier #1 Standard Limited Warranty apply plus the addition of labor costs. The terms of the Tier #3 Limited Warranty are the same as the Tier #2 Limited Warranty with the only exception being the term being four (4) years from the date of shipment from the factory.

TIER #5: 5 Years with Labor Limited Warranty — **25% of Sales Price (not less then $1250)**

LOADTEC, Load Technology Inc., offers this Tier #5 Limited Warranty as an option to the Tier #1, Standard Limited Warranty as previously described. The terms of the Tier #1 Standard Limited Warranty apply plus the addition of labor costs. The terms of the Tier #5 Limited Warranty are the same as the Tier #2 Limited Warranty with the only exception being the term being five (5) years from the date of shipment from the factory.

GENERAL CONDITIONS:

- No Warranty Tier covers incidental and/or consequential damages, nor does it cover failures caused by abuse, improper use, improper installation, improper connection, lack of reasonable maintenance, unauthorized modifications or repairs, shipping damage, accident, road hazard damage, or acts of god (such as; but not limited to: floods, hurricanes, tornadoes, earthquakes, or fire).
- Products that are resold after original installation or commissioning and ownership is transferred are not covered under this Warranty.
- Consumable components of the products (fuses, light bulbs, tires, trailer brakes, and other components that contain a "wear life") are not included in this Warranty and are specifically excluded from warranty coverage. Trailer components (wheels & tires) susceptible to road hazard damage after shipment from the factory are not covered under this warranty during any time period after shipment from factory.
- Tier 1 Warranty apply to all products of Load Technology except where a written notice is signed by the Purchaser.
- Tier 2, 3, 4, 5 Warranties are not available for all products provided by Load Technology, Inc. Certain products may have certain components, structures or assemblies specifically excluded due to the lack of available extended support by their manufacturer or supplier. Any such limitations will be indicated on the specific product's purchase documents.
- Tier 2, 3, 4, 5 Warranties are offered on an optional basis and are at an additional cost and are not included in base equipment offering unless specifically listed in writing in the purchase documents.
- Tier 2, 3, 4, 5 Warranties are only available for products installed and/or used in the continental United States. This condition is not waived if quoted or sold and the unit is installed/or used outside the continental United States. The remedy for such an occurrence is the refunding of the Warranty purchase price to the Purchaser.
- Tier 2, 3, 4, 5 Warranty must be purchased within 90 days of the product shipping from the Factory. The Tier 2,3,4,5 Warranties are invalid if purchased after a warrantable occurrence but within the 90 day shipping period. The remedy for such occurrence is the refunding of the Warranty purchase price to the Purchaser.
- Tier 1,2, 3, 4, 5 All claims must be presented to Load Technology in a timely manner. A reasonable amount of time must be allowed to remedy any claims. All claims must be presented to Load Technology for evaluation **before** any repairs are initiated. Any repairs undertaken without authorization are not covered under this Warranty and any claim for payment will be rejected.

Purchaser / owner agrees to make no claims against Load Technology, Inc. based on negligence. This Warranty is in lieu of any other Warranties, expressed or implied.

Attachment K

Option 4 Adder: Cummins 350 Natural Gas Spec Sheet

Gaseous Fuel Generator Set
KTA19G Engine Series

Specification Sheet
Model GFEB EPA SI NSPS Certified

NOTE: This engine is EPA SI NSPS certified and must be operated as outlined in the O&M manual.

Model GFEB Ratings	
Speed/Frequency	1800 rpm/60 Hz
Rating	Standby
Compression Ratio	8.5:1
Natural Gas Rating @ 0.8 P.F.*	350 kW (437 kVa)
Propane Rating @ 0.8 P.F.	N/A

NOTE: 54 °C (130 °F) or lower water temperature to the aftercooler.

* Per EPA SI NSPS, rating based on commercial pipeline natural gas.

All gases such as field, digester, and sewage gas will require an analysis of the specified gas and pre-approval from the factory. Consult your Cummins Distributor for details.

Description

The Cummins NPower GF-series commercial Generator Set (GenSet) is a fully integrated power generation system providing optimum performance, reliability, and versatility for stationary standby power applications.

A primary feature of the GF-series GenSet is strong motor-starting capability and fast recovery from transient load changes. The torque-matched system includes a heavy-duty Cummins 4-cycle spark-ignited engine, an AC alternator with high motor-starting kVA capacity, and an electronic voltage regulator with three-phase sensing for precise regulation under steady-state or transient loads. GFEB accepts 80% of the nameplate standby rating within ten seconds.

The standard PowerCommand® digital electronic control is an integrated system that combines engine and alternator controls for high reliability and optimum GenSet performance.

Optional GenSet housing and component heaters shield the GenSet from extreme operating conditions.* Environmental concerns are addressed by low exhaust emission engines, sound-attenuated housings, and exhaust silencers. A wide range of options, accessories, and services are available to allow configuration to your specific power generation needs.

Every production unit is factory tested at rated load and power factor. This testing includes demonstration of rated power and single-step rated load pickup.

Cummins NPower manufacturing facilities exemplify quality standards, emphasizing our commitment to high quality in the design, manufacture, and support of our products.

GenSets are designed, manufactured, and tested to relevant codes and standards listed below.

Features

Cummins Heavy-Duty Engine - Rugged 4-cycle industrial spark-ignited engine delivers reliable power, low emissions, and quick response to load changes.

UL 2200 Certification - This Cummins GenSet has been designed, tested, and certified to UL 2200 standards.

Alternator - Several alternator sizes offer selectable motor-starting capability with low reactance 2/3 pitch windings, low waveform distortion with non-linear loads, fault-clearing short-circuit capability, and class H insulation. The alternator electrical insulation system is UL1446 Listed. The alternator is certified to CSA 22.2 and UL 1004 Listed.

AmpSentry™ - A comprehensive monitoring and control system integral to the PowerCommand® Control System, AmpSentry™ guards the electrical integrity of the alternator and power system by providing protection against a wide array of fault conditions in the GenSet or in the load. AmpSentry™ may be utilized in lieu of a main line circuit breaker.

Control Systems - The PowerCommand® electronic control is standard equipment and provides total GenSet system integration, including automatic remote starting/stopping, precise voltage regulation, alarm and status message display, output metering, and auto-shutdown at fault detection. The PowerCommand® control is UL508 Listed, as well as NFPA 110 compliant in standalone applications. The controls are certified to CSA C282-M1999 and CSA 22.2 No.14 M91.

Warranty and Service - All Cummins NPower GenSets are backed by a comprehensive one-year warranty program and supported by a worldwide network of over 200 locations to assist with warranty, service, parts, and planned maintenance support.

* Cold weather heaters are recommended when ambient temperatures are below 0 °C (32 °F).

© 2015 | Cummins NPower LLC | Specifications subject to change without notice

Generator Set

The general specifications provide representative configuration details. Consult the outline drawing for actual installation design specifications

Specifications - General	
Unit Width	1778 mm (71 in) Open set
Unit Height	2159 mm (86 in) Open set
Unit Length	3734 mm (149 in) Open set
Unit Wet Weight *	4010 to 4731 kg (8822 to 10408 lbs) - Dependent on selected alternator. Open set
Rated Speed	1800 rpm
Voltage Regulation, No Load to Full Load	±1%
Random Voltage Variation	±1% (Three phase only.)
Frequency Regulation	Isochronous
Random Frequency Variation	±0.5%
Radio Frequency Interference	Optional PMG excitation operates in compliance with BS800 and VDE level G and N. Addition of RFI protection kit allows operation per MIL-STD-461 and VDE level K.

* Weight does not include silencer, catalyst, batteries, circuit breakers, or optional equipment.

Rating Definitions

Standby Rating: Applicable for supplying emergency power for the duration of the utility power outage. No overload capability is available for this rating. Under no condition is an engine allowed to operate in parallel with the public utility at the Standby Power rating. This rating should be applied where reliable utility power is available. A Standby rated engine should be sized for a maximum of an 80% average load factor and 200 hours of operation per year. This includes less than 25 hours per year at the Standby Power rating. Standby ratings should never be applied except in true emergency power outages. Negotiated power outages contracted with a utility company are not considered an emergency. (AEB 26.02)

Site Derating Factors

This unit is rated for 38 °C (100 °F). See engine data sheet FR 4538 for altitude and ambient derate curves.

See GenSet enclosure specification sheet for other applicable derates.

Data represents gross engine performance capabilities obtained and corrected in accordance with SAEJ1349 conditions of 100 kPa (29.61 in. Hg) barometric pressure [110 m (361 ft.) altitude], 25 °C (77 °F) inlet air temperature, and 100 kPa (.34 in. Hg) water vapor pressure using dry processed natural gas fuel with 905 BTU per standard cubic foot (33.72 kJ/L) lower heating value. Deration may be required due to altitude, temperature, or type of fuel. Consult your local Cummins Distributor for details.

Electrical System Connection

Warning: Backfeed to a utility system can cause electrocution and/or property damage. Do not connect GenSets to any building electrical system except through an approved device or after the building main disconnect is open. Neutral connection must be bonded in accordance with National Electrical Code.

Fuel System

Standard Carburetor – IMPCO

Low Pressure Dry Processed Natural Gas – (905 BTU/ft.^{3} L.H.V.)

Running Pressure to Engine.....381 to 508 mm WC (15 to 20 in. WC)
Minimum Gas Supply Pipe Size @ Engine (NG).....50.8 mm (2.0 in.)
Gas Supply Filter Pressure Rating.....690 kPa (100psi)
The preceding pipe size is only a suggestion and piping may vary with temperature, distance from fuel supply, and application of local codes. Gas must be available at adequate volume and pressure for engine at the regulator.

The GenSet (engine) performance is based on processed natural gas fuel with 905 BTU per standard cubic foot (33.72 kJ/L) lower heating value. Variations in fuel composition and/or supply pressure must be eliminated during steady state operation. Locate the gas regulator as near to the engine as possible. Some systems may need an accumulator or other device(s) for startup or unstable conditions. Contact the fuel supply utility for details.

UL 2200-certified GenSets comply with NFPA 37 requirements, but do not include visual indication (provided by others, if required) on shutoff valves.

© 2015 | Cummins NPower LLC | Specifications subject to change without notice

Engine

Cummins heavy-duty spark-ignited engines use advanced combustion technology for reliable and stable power, low emissions, and fast response to sudden load changes. Electronic governing is standard for applications requiring constant (isochronous) frequency regulation such as Uninterruptible Power Supply (UPS) systems, non-linear loads, or sensitive electronic loads. Optional coolant heaters are recommended for all emergency standby installations or for any application requiring fast load acceptance after start-up.

Specifications - Engine

Base Engine	Cummins Model KTA19G
Displacement	19 L (1159 in^3)
Overspeed Limit	2100 rpm
Regenerative Power	18.1 kW
Cylinder Block Configuration	Cast iron with replaceable wet cylinder liners
Cranking Current	900 amps at ambient temperature of 0 °C (32 °F)
Battery Charging Alternator	43 amps
Battery Type	8D (x2)
Starting Voltage	24-volt, negative ground
Standard Cooling System	See derates on Page 2
Lube Oil Filter Types	Dual spin-on canisters-combination full flow with bypass

Fuel Consumption

STANDBY LOAD		1/4	1/2	3/4	Full
NG Rating	kW	87.5	175	263	350
Natural Gas	CFH	1310	2560	3587	4615
Propane Vapor	CFH	N/A	N/A	N/A	N/A
Propane Liquid	GPH	N/A	N/A	N/A	N/A

Cooling	Full Load	
Jacket Water Heat Rejection to Coolant	294 kW	(16720 BTU/min)
Aftercooler Heat Rejection to Coolant	110 kW	(6256 BTU/min)
Heat Rejection to Room	49 kW	(2787 BTU/min)
Jacket Water Coolant Capacity (w/radiator)	76 L	(20 USG)
Jacket Water Coolant Flow Rate	526 L/min	(137 GPM)
Aftercooler Coolant Capacity (w/radiator)	49 L	(13 USG)
Aftercooler Coolant Flow Rate	102 L/min	(27 GPM)
Jacket Water Max Coolant Friction Head	34 kPa	(5 psi)
Jacket Water Max Coolant Static Head	18.3 m	(60 ft)
Radiator Fan Load	26 kW	(35 hp)

Air	Full Load	
Combustion Air	575 L/sec	(1219 cfm)
Maximum Air Cleaner Restriction	381 mm H_2O	(15 in H_2O)
Alternator Cooling Air	990 L/sec	(2098 cfm)
Radiator Cooling Air	16576 L/sec	(35141 cfm)
Maximum Total External Restriction at Radiator (static)	12.7 mm H_2O	(0.5 in H_2O)

Exhaust	Full Load	
Gas Flow (Full Load)	1472 L/sec	(3121 cfm)
Maximum Gas Temperature - Dry Stack	697 °C	(1287 °F)
Total System Back Pressure Allowed	51 mm Hg	(2 in Hg)
Catalyst Back Pressure	N/A	N/A
Silencer Back Pressure (Factory Enclosed Units Only)	33.5 mm Hg	(1.32 in Hg)

Engine	Full Load	
Gross Engine Power Output	395 kWm	(529 hp)
BMEP @ Rated Load on NG	1395 kPa	(209 psi)
Piston Speed	9.53 m/sec	(1876 ft/min)
Oil Capacity	61 L	(16 USG)

© 2015 | Cummins NPower LLC | Specifications subject to change without notice

Alternator

Several alternators are available for application flexibility based on the required motor-starting kVA and other requirements. Larger alternator sizes have lower temperature rise for longer life of the alternator insulation system. In addition, larger alternator sizes can provide a cost-effective use of engine power in across-the-line motor-starting applications and can be used to minimize voltage waveform distortion caused by non-linear loads.

Single-bearing alternators couple directly to the engine flywheel with flexible discs for drive train reliability and durability. No gear reducers or speed changers are used. Two-thirds pitch windings eliminate third-order harmonic content of the AC voltage waveform and provide the standardization desired for paralleling of GenSets.

Separately Excited Permanent Magnet Generator (PMG) System - This option uses an integral PMG to supply power to the voltage regulator. A PMG system generally has better motor-starting performance, lower voltage dip upon load application, and better immunity from problems with harmonics in the main alternator output induced by non-linear loads. This option is recommended for use in applications that have large transient loads, sensitive electronic loads (especially UPS applications) or harmonic content, or that require sustained short-circuit current (sustained three-phase short circuit current at approximately three times rated for ten seconds).

Alternator Sizes - On any given model, various alternator sizes are available to meet individual application needs. Alternator sizes are differentiated by maximum winding temperature rise at the GenSet standby rating when operated in a 40 °C (104 °F) ambient environment. Not all temperature rise selections are available on all models. For other temperatures not listed below, contact your local Cummins distributor. Lower temperature rise is accomplished using larger alternators at lower current density. Lower temperature rise alternators have higher motor-starting kVA and lower voltage dip upon load application, and they are generally recommended to limit voltage distortion and heating due to harmonics induced by non-linear loads. An alternator space heater is recommended to inhibit condensation.

Specifications - Alternator

Design	Brushless, 4-pole, drip-proof revolving field
Stator	2/3 pitch
Rotor	Direct-coupled by flexible disc
Insulation System	Class H per NEMA MG1-1.65 or better
Standard Temperature Rise *	120 °C
Exciter Type	Permanent Magnet Generator (PMG)
Phase Rotation	A (U), B (V), C (W)
Alternator Cooling	Direct-drive centrifugal blower
AC Waveform Total Harmonic Distortion	<5% total no load to full linear load <3% for any single harmonic
Telephone Influence Factor (TIF)	<50 per NEMA MG1-22.43
Telephone Harmonic Factor (THF)	<3

	Voltage Ranges	Motor Starting Voltage	Maximum kVa (90% Sustained Voltage)	Alternator Datasheet
80 °C Alternator	120/208 Thru 139/240 240/416 Thru 277/480	Broad Range	1896	ADS306
	277/480	480	1749	ADS305
	347/600	600	1749	ADS305
105 °C Alternator	120/208 Thru 139/240 240/416 Thru 277/480	Broad Range	1749	ADS305
	277/480	480	1372	ADS342
	347/600	600	1372	ADS342
120 °C Alternator	120/208 Thru 139/240 240/416 Thru 277/480	Broad Range	1372	ADS342
	277/480	480	1210	ADS341
	347/600	600	1210	ADS341

* For UL1004 ratings, refer to temperature rise at 120 °C or below, and ambient temperature up to 40 °C

Amp Rating at Full Load Voltage

Full Load Voltage	120/240 (1 Ph)	120/208	127/220	139/240	220/380	240/416	254/440	277/480	347/600
Amps	N/A	1214	1148	1052	665	607	574	526	421

© 2015 | Cummins NPower LLC | Specifications subject to change without notice

Control System

PowerCommand® Control 3.3

The PowerCommand® Control is an integrated GenSet control system providing voltage regulation, engine protection, operator interface and isochronous governing (optional). The integration of all functions into a single control system provides enhanced reliability and performance compared to conventional GenSet control systems. Prototype tested; UL, CSA, and CE compliant. The PowerCommand® Control system includes:

Environment

- Ambient operating temperature from:
  -40 to +70 °C (-40 to 158 °F)
  HMI from -20 to +70 °C (-4 to 158 °F)
- Operating altitude up to 5000 m (13,000 ft.)

Features

- Control function provides battery monitoring and testing features and smart starting control system.
- Three phase sensing, full wave rectified voltage regulation, with a PWM output for stable operation with all load types.
- **AmpSentry™** protection providing a full range of alternator protection functions matched to the alternator provided.
- Extended Paralleling (Peak Shave/Base Load) regulates the GenSet real and reactive power output while paralleled to the utility. Power can be regulated at either the GenSet or utility bus monitoring point.
- PowerCommand® Control Network (PCCNet) and Modbus® interface for interconnecting to customer equipment.

Digital Voltage Regulation

- Configurable torque matching.
- 3-phase, 4 wire line-to-line sensing.
- Integrated digital electronic voltage regulator.

Digital Governing

- Temperature dynamic governing.
- Integrated digital electronic isochronous governing.

Engine Data

- DC voltage.
- Engine speed and coolant temperature.
- 24 VDC battery configuration.
- Adjustable lube oil pressure.
- Adjustable engine idle speed.
- Lube oil pressure and temperature.
- Comprehensive FAE data (where applicable).

Alternator Data

- 60 Hz frequency.
- Three Phase AC current.
- Alternator heater status.
- Winding and bearing temperatures.
- AC: Single or three-phase line-to-line or line-to-neutral.
- Total and individual phase power factor, kW and kVA.
- Digital output voltage regulation within +/-1.0% any loads between no load to full. Drift = no more than +/-1.5% for 40 °C (104 °F) temperature change in 8 hours.

AmpSentry™ Alternator Protection

- Overload and over current warning.
- Field overload shutdown.
- AmpSentry™ protective relay.
- Over current and short circuit shutdown.
- Over and under voltage shutdown.
- Over and under frequency shutdown.
- Reverse power and reverse var shutdown.
- Single and three phase fault current regulation.

Engine Protection

- Cranking lockout.
- Overspeed
- shutdown.
- Sensor failure indication.
- Low fuel level warning or shutdown.
- Fail to start (overcrank) and fail to crank shutdown.
- Full authority electronic engine protection.
- Battery voltage monitoring, protection, and testing.
- Engine vitals - oil temperature and pressure, coolant temperature and levels, warning and shutdowns.

Operator/Display Panel

- Multiple language support.
- Sync check relay.
- Isochronous kW and kVar load sharing.
- Load govern control for utility paralleling.
- Extended paralleling (baseload/peak shave) mode.
- Displays paralleling breaker status.
- 320 x 240 pixels graphic LED backlight LCD.
- Provides direct control of the paralleling breaker.
- Alphanumeric display with pushbutton circuit breaker position indication and manual control.
- Auto, manual, start, stop, fault reset, and lamp test/panel lamp switches.
- LED lamps indicating GenSet running, remote start, not in auto, common shutdown, common warning, manual run mode, auto mode and stop.
- First start sensor system selects first GenSet to close to bus.
- Phase lock loop synchronizer with voltage matching.
- Digital power transfer control for use with breaker pair to provide open transition, closed transition, ramping closed transition, peaking, and base load functions.

Control Functions

- Data logging and cycle cranking.
- Load shed.
- Remote emergency stop.
- Time delay start and cooldown.
- Configurable inputs and outputs (4).
- Real time clock for fault and event time stamping.
- Exerciser clock and time of day start/stop.

Other Display Data

- GenSet hardware data.
- Fault history – up to 32 events.
- Start attempts, starts, running hours, kW hours.
- Data logs (some information requires InPower™ and fault simulation).
- Engine data – operational data, monitored status, functions, auxiliary system inputs, etc.
- Service adjustment screens - operational, customer interface, configurable set up, calibration, etc.
- Load profile (operating hours at % load in 5% increments).
- Optional PowerCommand® 3.3 control with Masterless Load Demand (MLD).

© 2015 | Cummins NPower LLC | Specifications subject to change without notice

Generator Set Options

Engine

- 240/480 V, 4000 W coolant heaters
- 208 V, 3750 W coolant heaters (2)
- 120/208/240 V, 300 W lube oil heater

Cooling System

- Heat exchanger cooling
- Remote radiator cooling

Fuel System

- Flexible fuel connector
- Fuel strainer

Alternator (see Page Four for available options)

Exhaust System

- GenSet mounted muffler (enclosure models only)

Generator Set

- Batteries
- Battery charger
- Main line circuit breaker
- PowerCommand® Network Communication Module (NCM)
- Modbus® to BACnet™ Module
- Weather protective enclosure (F001) with silencer
- Level I enclosure w/silencer
- Level II enclosure w/silencer
- Audible Alarm
- Remote Drains
- Oil Maintainer
- Remote annunciator panel
- Spring isolators
- Two-year standby warranty
- Five-year basic power warranty

Available Products and Services

A wide range of Cummins Power Generation products and services is available to match your power Generation System requirements. Contact your local Cummins Distributor for more information at www.cumminsnpower.com.

- Diesel and Spark-Ignited Generator Sets
- Transfer Switches
- Bypass Switches
- Parallel Load Transfer Equipment
- Digital Paralleling Switchgear
- PowerCommand® Network and Software
- Distributor Application Support
- Planned Maintenance Agreements

Warranty

All components and subsystems are covered by an express limited one-year warranty. Other optional and extended factory warranties and local distributor maintenance agreements are available. Contact your local Cummins Distributor/Dealer for more information at www.cumminsnpower.com.

Certifications

CSA Group tests products under a formal process to ensure that they meet the safety and/or performance requirements of applicable standards. This GenSet is certified to: CSA 22.2 No. 100 Motors and Generators; CSA 22.2 No. 0.4-044 Bonding of Electrical Equipment; CSA 22.2 No. 14 Industrial Control Equipment; and CSA 22.2 No. 0 General Requirements - Canadian Electrical Code, Part II.

The Prototype Test Support (PTS) program verifies the performance integrity of the GenSet design. Products bearing the PTS symbol have been subjected to demanding tests in accordance with NFPA 110 to verify the design integrity and performance under both normal and abnormal operating conditions. These conditions include: short circuit, endurance, temperature rise, torsional vibration, and transient response, as well as full load pickup.

Underwriters Laboratory (UL) is a world leader in product safety testing and certification. This GenSet is certified to UL2200 as open set, weather enclosure, and sound-attenuated enclosure configurations. The generator is certified to UL1004. The PowerCommand® Control System is certified to UL508.

Manufactured By

Cummins NPower LLC
875 Lawrence Drive
DePere, WI 54115
920.337.9750
Fax: 920.337.9746
www.cumminsnpower.com

Cummins® and PowerCommand® are registered trademarks of Cummins Inc.
AmpSentry™ and InPower™ are trademarks of Cummins Inc.

Attachment L

Option 4 Adder: Cummins 350 Natural Gas Drawing L2

ENGINE SERVICE CONNECTIONS

GAS INLET ----------2.00" NPT
ENGINE WATER IN ----------3.50" O.D.
ENGINE WATER OUT ----------3.00" O.D.
DE-AERATION ----------1/4" NPT
MAG PICK-UP ----------3/8-16 UNF
OIL DRAIN PLUG ---1_1/16-12 UN-2B ORING
EXHAUST STACK ----------5.00" 125#/150# ANSI FLANGE
AFTERCOOLER WATER IN -------1.25" O.D.
AFTERCOOLER WATER OUT -------1.25" O.D.
EXH TEMP COUPLING ---------1/4" NPT

FLUID CAPACITIES

ENGINE OIL ----------16 GAL △1
ENGINE COOLANT ----------32 QTS
AFTERCOOLER COOLANT ---------4 QTS
RAD JACKET WATER ----------12.20 GAL
RAD AFTERCOOLER ----------11.42 GAL

SERVICE NOTES

10.00 REQUIRED TO REMOVE OIL PAN
15.00 REQUIRED TO REMOVE OIL DIPSTICK
1.81 REQUIRED TO REMOVE OIL FILTER

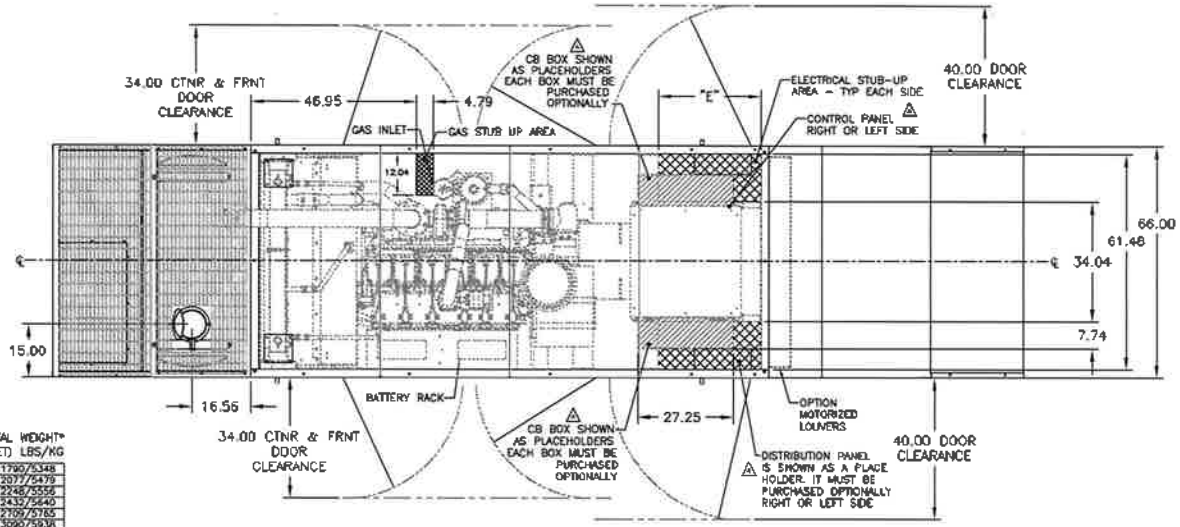

GENERATOR FRAME SIZE	DIM* "A"	DIM "B"	DIM "C"	DIM "D"	DIM "E"	TOTAL WEIGHT* (WET) LBS/KG
NEWAGE UD274 K	62.21	29.00	132.34	63.26	32.75	11790/5348
NEWAGE HD434 C	63.66	28.79	136.84	61.48	29.13	12077/5479
NEWAGE HD434 D	64.59	28.67	136.84	61.48	29.13	12248/5556
NEWAGE HD434 E	65.57	28.55	136.84	61.48	29.13	12437/5640
NEWAGE HD434 F	66.97	28.37	136.84	61.48	29.13	12709/5765
NEWAGE HD534 C	68.73	28.15	141.71	59.91	24.89	13090/5938
NEWAGE HD534 D	68.73	28.15	141.71	59.91	24.89	13379/6068

*SEE NOTES 7, 8 AND 9

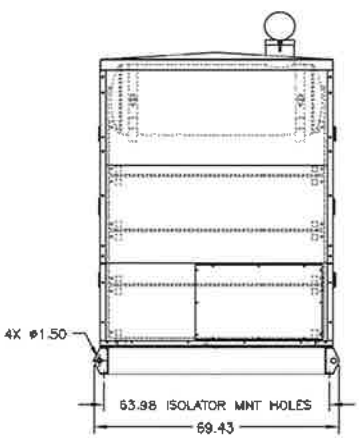

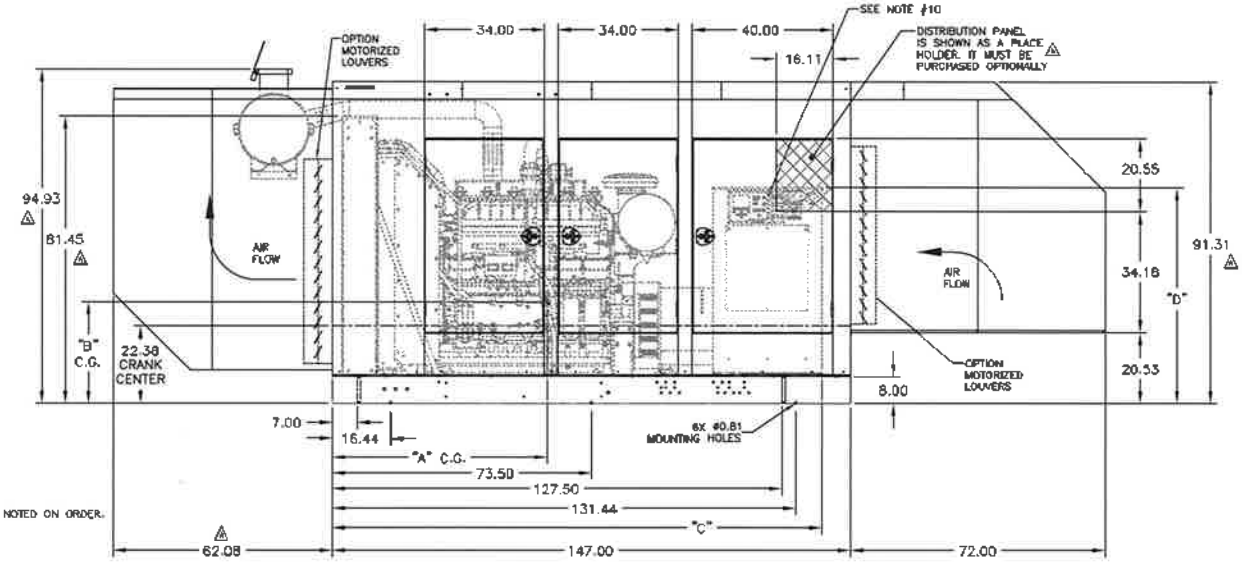

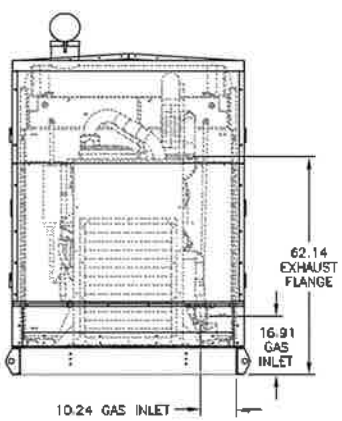

NOTES:
1. ENCLOSURE IS TO BE PAINTED ONAN GREEN UNLESS OTHERWISE NOTED ON ORDER.
2. ALL HARDWARE TO BE STAINLESS STEEL.
3. ALL DOORS KEYED ALIKE.
4. STAINLESS STEEL LIFT-OFF DOOR HINGES
5. FOLDING T-HANDLE COMPOSITE DOOR LATCH
6. ENCLOSURE IS 14 GAUGE
7. ALL WEIGHTS AND DIMENSIONS ARE APPROXIMATE
8. WEIGHTS DO NOT INCLUDE BATTERIES OR OPTIONAL EQUIPMENT.
9. WEIGHTS INCLUDE STANDARD CRITICAL GRADE EXHAUST. FOR HOSPITAL GRADE EXHAUST ADD 400 LBS./182 KG.
10. CONTROLLER CAN BE MOUNTED ON EITHER SIDE OF CABINET.
11. REQUIRES USE OF SPREADER BAR WHEN LIFTING TO PREVENT DAMAGE TO UNIT.
12. GENSET DOES NOT INCLUDE FLOOR. CONTACT FACTORY FOR PRICING.
13. GENSETS HAVE INTEGRAL ISOLATION

REV	ECN	DESCRIPTION OF REVISION	BY	DATE
A	2013-193	UPDATED ENCL HEIGHT & EXHAUST; ADDED CB/DIST PNL ZONES & NOTES; OIL CAPACITY: 18 GALLONS WAS 26 DIM 62.08 WAS 58.08	DJM	11APR2013

ASSY,GENSET,KTA19G3,B
LVL 1/LVL 2 ENCL,WT SILENCER
DRAWN BY: AUTO CAD
SCALE: N/A
EST WEIGHT: N/A
SHEET 1 OF 1
DRAWING NO GFEB-03

Attachment M

Option 5 Alternate to 4: Cummins Diesel 300 DQHAB Spec Sheet

Specification sheet

Diesel generator set QSM11 series engine

300 kW standby

Description

Cummins Power Generation commercial generator sets are fully integrated power generation systems providing optimum performance, reliability and versatility for stationary standby and prime power applications.

Features

Cummins® heavy-duty engine - Rugged 4-cycle, industrial diesel delivers reliable power, low emissions and fast response to load changes.

Alternator - Several alternator sizes offer selectable motor starting capability with low reactance 2/3 pitch windings, low waveform distortion with non-linear loads and fault clearing short-circuit capability.

Permanent magnet generator (PMG) - Offers enhanced motor starting and fault clearing short-circuit capability.

Control system - The PowerCommand® electronic control is standard equipment and provides total genset system integration including automatic remote starting/stopping, precise frequency and voltage regulation, alarm and status message display, AmpSentry™ protection, output metering, auto-shutdown at fault detection and NFPA 110 Level 1 compliance.

Cooling system – Standard cooling package provides reliable running, at the rated power level, at up to 52 °C (126 °F) ambient temperature.

Enclosures - Optional weather protective and sound attenuated enclosures are available.

Fuel tanks - Dual wall sub-base fuel tanks are also available.

NFPA - The genset accepts full rated load in a single step in accordance with NFPA 110 for Level 1 systems.

Warranty and service - Backed by a comprehensive warranty and worldwide distributor network.

	Standby rating		Prime rating		Continuous rating		Data sheets	
Model	60 Hz kW (kVA)	50 Hz kW (kVA)	60 Hz kW (kVA)	50 Hz kW (kVA)	60 Hz kW (kVA	50 Hz kW (kVA	60 Hz	50 Hz
DQHAB	300 (375)		270 (338)				D-3449	

©2014 Cummins Power Generation Inc. | S-1586f (9/14)

Generator set specifications

Governor regulation class	ISO 8528 Part 1 Class G3
Voltage regulation, no load to full load	± 0.5%
Random voltage variation	± 0.5%
Frequency regulation	Isochronous
Random frequency variation	± 0.5%
Radio frequency emissions compliance	IEC 801.2 through IEC 801.5; MIL-STD-461C, Part 9 Radiated Emissions (EMI)

Engine specifications

Bore	125 mm (4.92 in)
Stroke	147.1 mm (5.79 in)
Displacement	10.8 L (661.0 in³)
Configuration	Cast iron, in-line 6 cylinder
Battery capacity	550 amps minimum at ambient temperature of 0 °C (32 °F) and above
Battery charging alternator	70 amps
Starting voltage	24 volt, negative ground
Fuel system	Direct injection: number 2 diesel fuel, fuel filter (with water separator), automatic electric fuel shutoff
Fuel filter	
Air cleaner type	
Lube oil filter type(s)	Single spin-on, combination full flow and bypass filters
Standard cooling system	52 °C (125 °F) ambient radiator

Alternator specifications

Design	Brushless, 4 pole, drip proof revolving field
Stator	2/3 pitch
Rotor	Single bearing, flexible discs
Insulation system	Class H
Standard temperature rise	125 °C standby, 105 °C prime
Exciter type	PMG (Permanent magnet generator)
Phase rotation	A (U), B (V), C (W)
Alternator cooling	Direct drive centrifugal blower
AC waveform total harmonic distortion	< 5% no load to full linear load, < 3% for any single harmonic
Telephone influence factor (TIF)	< 50 per NEMA MG1-22.43
Telephone harmonic factor (THF)	< 3

Available voltages

3-phase reconnectable				3-phase non-reconnectable
• 110/190	• 115/200	• 115/230	• 120/208	• 347/600
• 120/240	• 127/220	• 139/240	• 220/380	
• 230/400	• 240/416	• 254/440	• 277/480	

Note: Consult factory for other voltages.

Generator set options and accessories

Engine
- ☐ 240 V 300 W lube oil heater
- ☐ 480 V 300 W lube oil heater
- ☐ 208/240-480 V 4500 W coolant heater
- ☐ 208/240 V-480 V 6500 W coolant heater
- ☐ Heavy duty air cleaner
- ☐ Engine oil temperature

Control panel
- ☐ 120 V 30 W control anti-condensation heater
- ☐ 240 V 30 W control anti-condensation heater
- ☐ Exhaust pyrometer
- ☐ Ground fault indication
- ☐ Remote fault signal package
- ☐ Run relay package

Alternator
- ☐ 80 °C rise
- ☐ 105 °C rise
- ☐ 125 °C rise
- ☐ 120 V 100 W anti-condensation heater
- ☐ 240 V 100 W anti-condensation heater

Exhaust system
- ☐ Critical grade exhaust silencer
- ☐ Exhaust packages
- ☐ Industrial grade exhaust silencer
- ☐ Residential grade exhaust silencer

Fuel system
- ☐ 1022 L (270 gal) sub-base tank
- ☐ 1136 L (300 gal) sub-base tank
- ☐ 1514 L (400 gal) sub-base tank
- ☐ 1893 L (500 gal) sub-base tank
- ☐ 2271 L (600 gal) sub-base tank
- ☐ 2498 L (660 gal) sub-base tank
- ☐ 3218 L (850 gal) sub-base tank
- ☐ 6435 L (1700 gal) sub-base tank
- ☐ 9558 L (2525 gal) sub-base tank
- ☐ Day tank with pump control

Generator set
- ☐ AC entrance box
- ☐ Battery
- ☐ Battery charger
- ☐ Enclosure: aluminum, steel, weather protective or sound attenuated
- ☐ Export box packaging
- ☐ UL 2200 Listed
- ☐ Main line circuit breaker
- ☐ PowerCommand Network Communications Module (NCM)
- ☐ Remote annunciator panel
- ☐ Spring isolators
- ☐ 2 year standby power warranty
- ☐ 2 year prime power warranty
- ☐ 5 year basic power warranty
- ☐ 10 year major components warranty

Note: Some options may not be available on all models - consult factory for availability.

Our energy working for you.™

©2014 Cummins Power Generation Inc. | S-1586f (9/14)

Control system PCC 2100

PowerCommand control is an integrated generator set control system providing governing, voltage regulation, engine protection and operator interface functions. Major features include:

- Integral AmpSentry™ Protective Relay providing a full range of alternator protection functions that are matched to the alternator provided.
- Battery monitoring and testing features and smart starting control system.
- Three phase sensing, full wave rectified voltage regulation system, with a PWM output for stable operation with all load types.
- Standard PCCNet™ and optional Echelon® LONWORKS® network interface.
- Control suitable for operation in ambient temperatures from -40 °C to +70 °C (-40 °F to +158 °F) and altitudes to 5000 meters (13,000 feet).
- Prototype tested; UL, CSA, and CE compliant.
- InPower™ PC-based service tool available for detailed diagnostics.

Operator/display panel

- Off/manual/auto mode switch
- Manual run/stop switch
- Panel lamp test switch
- Emergency stop switch
- Alpha-numeric display with pushbutton access for viewing engine and alternator data and providing setup, controls and adjustments
- LED lamps indicating genset running, not in auto, common warning, common shutdown
- Configurable LED lamps (5)
- Configurable for local language

Engine protection

- Overspeed shut down
- Low oil pressure warning and shut down
- High coolant temperature warning and shut down
- High oil temperature warning (some models)
- Low coolant level warning or shut down
- Low coolant temperature warning
- High and low battery voltage warning
- Weak battery warning
- Dead battery shut down
- Fail to start (overcrank) shut down
- Fail to crank shut down
- Redundant start disconnect
- Cranking lockout
- Sensor failure indication

Engine data

- DC voltage
- Lube oil pressure
- Coolant temperature
- Lube oil temperature (some models)
- Engine speed

AmpSentry AC protection

- Over current and short-circuit shut down
- Over current warning
- Single and three phase fault regulation
- Over and under voltage shut down
- Over and under frequency shut down
- Overload warning with alarm contact
- Reverse power and reverse Var shut down
- Excitation fault

Alternator data

- Line-to-line and line-to-neutral AC volts
- Three phase AC current
- Frequency
- Total and individual phase power factor, kW and kVA

Other data

- Genset model data
- Start attempts, starts, running hours
- kW hours (total and since reset)
- Fault history
- Load profile (hours less than 30% and hours more than 90% load)
- System data display (optional with network and other PowerCommand gensets or transfer switches)

Governing

- Digital electronic isochronous governor
- Temperature dynamic governing
- Smart idle speed mode
- Glow plug control (some models)

Voltage regulation

- Digital PWM electronic voltage regulation
- Three phase line-to-neutral sensing
- Suitable for PMG or shunt excitation
- Single and three phase fault regulation
- Configurable torque matching

Control functions

- Data logging on faults
- Fault simulation (requires InPower)
- Time delay start and cooldown
- Cycle cranking
- PCCNet interface
- Configurable customer inputs (4)
- Configurable customer outputs (4)
- Configurable network inputs (8) and outputs (16) (with optional network)
- Remote emergency stop

Options

- ☐ LED bargraph AC data display
- ☐ Thermostatically controlled space heater
- ☐ Key-type mode switch
- ☐ Ground fault module
- ☐ Auxiliary relays (3)
- ☐ Echelon LONWORKS interface
- ☐ Modion Gateway to convert to Modbus (loose)
- ☐ PowerCommand iWatch web server for remote monitoring and alarm notification (loose)
- ☐ Digital input and output module(s) (loose)
- ☐ Remote annunciator (loose)

For further detail see document S-1409.

©2014 Cummins Power Generation Inc. | S-1566f (9/14)

Emergency standby power (ESP):

Applicable for supplying power to varying electrical load for the duration of power interruption of a reliable utility source. Emergency Standby Power (ESP) is in accordance with ISO 8528. Fuel Stop power in accordance with ISO 3046, AS 2789, DIN 6271 and BS 5514.

Limited-time running power (LTP):

Applicable for supplying power to a constant electrical load for limited hours. Limited Time Running Power (LTP) is in accordance with ISO 8528.

Prime power (PRP):

Applicable for supplying power to varying electrical load for unlimited hours. Prime Power (PRP) is in accordance with ISO 8528. Ten percent overload capability is available in accordance with ISO 3046, AS 2789, DIN 6271 and BS 5514.

Base load (continuous) power (COP):

Applicable for supplying power continuously to a constant electrical load for unlimited hours. Continuous Power (COP) in accordance with ISO 8528, ISO 3046, AS 2789, DIN 6271 and BS 5514.

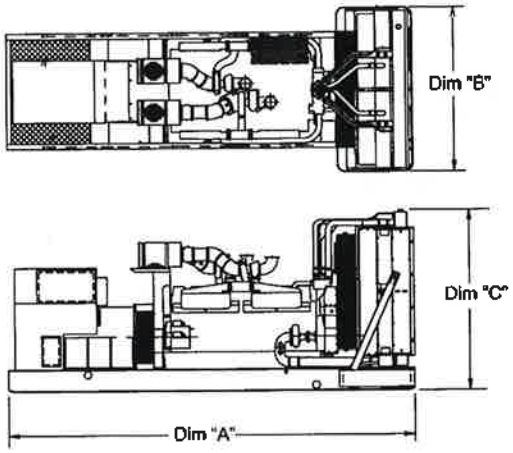

This outline drawing is for reference only. See respective model data sheet for specific model outline drawing number.

Do not use for installation design

Model	Dim "A" mm (in.)	Dim "B" mm (in.)	Dim "C" mm (in.)	Set Weight* dry kg (lbs)	Set Weight* wet kg (lbs)
DQHAB	3453 (136.0)	1524 (60.0)	1803 (71.0)	2676 (5900)	2762 (6090)

* Weights represent a set with standard features. See outline drawings for weights of other configurations.

Codes and standards

Codes or standards compliance may not be available with all model configurations – consult factory for availability.

ISO 9001	This generator set is designed in facilities certified to ISO 9001 and manufactured in facilities certified to ISO 9001 or ISO 9002.	UL	The generator set is available listed to UL 2200, Stationary Engine Generator Assemblies for all 60 Hz low voltage models. The PowerCommand control is Listed to UL 508 - Category NITW7 for U.S. and Canadian usage.
PTS	The Prototype Test Support (PTS) program verifies the performance integrity of the generator set design. Cummins Power Generation products bearing the PTS symbol meet the prototype test requirements of NFPA 110 for Level 1 systems.	**U.S. EPA**	Engine certified to Stationary Emergency U.S. EPA New Source Performance Standards, 40 CFR 60 subpart IIII Tier 2 exhaust emission levels. U.S. applications must be applied per this EPA regulation.
CSA	All low voltage models are CSA certified to product class 4215-01.	**International Building Code**	The generator set package is available certified for seismic application in accordance with the following International Building Code: IBC2000, IBC2003, IBC2006, IBC2009 and IBC2012.

Warning: Back feed to a utility system can cause electrocution and/or property damage. Do not connect to any building's electrical system except through an approved device or after building main switch is open.

North America
1400 73rd Avenue N.E.
Minneapolis, MN 55432
USA

Phone 763 574 5000
Fax 763 574 5298

Our energy working for you.™

Power Generation

©2014 Cummins Power Generation Inc. All rights reserved.
Cummins Power Generation and Cummins are registered trademarks of Cummins Inc. PowerCommand, AmpSentry, InPower and "Our energy working for you." are trademarks of Cummins Power Generation. Other company, product, or service names may be trademarks or service marks of others. Specifications are subject to change without notice.

S-1586f (9/14)

cumminspower.com

Attachment N

Option 5 Alternate to 4: Cummins Diesel 300 DQHAB Drawing Level 2 Housing & 600 gal tank

Creo Parametric

ECO NO	LTR	NO	DESCRIPTION	DRN	CHK	APPD	DATE
ECO-137473	D	1	SEPARATED DIM_G BY MODEL, ZONE D4	JPR	RK	R.KISHORE	20AUG 3
		2	SEE SHEET 4	JPR	RK	R.KISHORE	20AUG 3

TABULATION

TANK/LIFT BASE FEATURE CODE	TANK CAPACITY	TANK WEIGHT DRY KG (LBS)	D_H_D	DIM_Z	DIM_F	DIM_G DFEG, DFEH, DFEJ, DFEK	DIM_G DQHAA, DQHAB	DIM_G DQDAA, DQDAB, DQDAC	DIM_H	DIM_I	DIM_J	DIM_E
C201	300	1060 (2338)	2843 (104)	183 (7.2)	305 (12)	1525.6 (60.0)	1447.6 (57.0)	1371.8 (54.0)	526 (20.7)	1126 (44.3)	1122 (44.2)	614.7 (24.2)
C202/C242	400/270	1105 (2438)	2694 (106)	234 (9.2)	356 (14)	1676.6 (66.0)	1498.6 (59.0)	1422.8 (56.0)	577 (22.7)	1177 (46.3)	1173 (46.2)	665 (26.2)
C203	500	1171 (2584)	2743 (108)	284 (11.2)	406 (16)	1726.6 (68.0)	1548.6 (61.0)	1472.8 (58.0)	627 (24.7)	1228 (48.3)	1224 (48.2)	716.3 (28.2)
C204	600	1253 (2765)	2819 (111)	361 (14.2)	483 (19)	1803.6 (71.0)	1625.6 (64.0)	1549.8 (61.0)	704 (27.7)	1304 (51.3)	1300 (51.2)	792.5 (31.2)
C205	650	1295 (2857)	2858 (112.5)	399 (15.7)	521 (20.5)	1841.6 (72.5)	1663.6 (65.5)	1587.8 (62.5)	742 (29.2)	1343 (52.8)	1335 (52.7)	830.5 (32.7)
C206	720	1275 (2814)	2895 (114)	437 (17.2)	559 (22)	NA	NA	1625.8 (64.0)	780 (30.7)	1381 (54.3)	1377 (54.2)	868.7 (34.2)
C207	850	1445 (3188)	2997 (118)	538 (21.2)	660 (26)	1980.6 (78.0)	1802.6 (71.0)	NA	881 (34.7)	1481 (58.3)	1478 (58.2)	970.3 (38.2)
F214	NA	NA	2540 (100)	81 (3.2)	203 (8)	1523.6 (60.0)	1345.6 (53.0)	1371.8 (50.0)	424 (16.7)	1024 (40.3)	1021 (40.2)	513.1 (20.2)

OPTIONAL FEATURE
F202,F205

TABULATION

MODEL	KW	CG_DIM "A"	CG_DIM "B"	CG_DIM "C"	STEEL ENCLOSURE WEIGHT KG (LBS)	ALUMINUM ENCLOSURE WEIGHT KG (LBS)
DFAB	230	2111 (83.1)	1041 (41)	869 (34.2)	5755 (12688)	5265 (11598)
DFAC	250	2103 (82.8)			5823 (12838)	5333 (11748)
DQAD	250			866 (34.1)		
DQAE	275	2093 (82.4)		869 (34.2)	5914 (13038)	5424 (11948)
DQAF	300	2085 (82.1)		871 (34.3)	6027 (13288)	5537 (12198)
DFBF	275	2049 (80.7)		881 (34.7)	6387 (14078)	5897 (12988)
DFCB	300	2035 (80.1)		884 (34.8)	6522 (14378)	6032 (13288)
DFCC	350	2014 (79.3)		886 (34.9)	6635 (14628)	6145 (13538)
DFCE	400	1999 (78.7)		889 (35.0)	6735 (14848)	6245 (13758)
DFEG	350	1994 (78.5)		T34 (26.9)	7743 (17072)	7253 (15982)
DFEH	400	1976 (77.8)			7873 (17355)	7383 (16268)
DFEJ	450	1956 (77.0)		T37 (29.0)	8026 (17696)	7536 (16606)
DFEK	500	1933 (76.1)			8182 (17956)	7672 (16906)
DQHAA	250	1927 (75.9)		T23 (28.5)	5951 (13088)	5467 (11998)
DQHAB	275					
DQDAC	300	1945 (76.6)		724 (28.5)	6057 (13388)	5567 (12298)
DQHAA	275	2093 (82.4)		869 (34.2)	6271 (13826)	5781 (12736)
DQHAB	300	2085 (82.1)		871 (34.3)	6384 (14078)	5894 (12986)

***WEIGHT & CG'S ARE SHOWN WITH HIGHEST GALLON FUEL TANK, ENCLOSURE, AND STANDARD WET GENSET. ADDITION OF OTHER FEATURES MAY CHANGE THE WEIGHT.

NOTES:

1. DIMENSIONS SHOWN IN ( ) ARE INCHES.
2. FOUNDATION REFERENCE POINT (—•—). SEE FOUNDATION DRAWING FOR DETAILS.
3. FOR FEATURE CODE L116 (FLORIDA TANKS) ADD 105.6 [4.16"] TO DIMS D-J
4. SEE SHEET 2 FOR TANK VENT LOCATIONS.
5. EXCESSIVE TWISTING OF THE FUEL TANK, WHEN FASTENING IT TO A FOUNDATION, MAY RESULT IN STRUCTURAL FAILURE OF THE TANK. TO ENSURE THE INSTALLATION DOES NOT EXCESSIVELY TWIST THE FUEL TANK, THE FOLLOWING PROCEDURE MUST BE OBSERVED:
   - 5.1 REFER TO OWAN APPLICATION MANUAL T030 FOR GENERAL GENSET/TANK MOUNTING GUIDELINES.
   - 5.2 (NOTE REMOVED)
   - 5.3 (NOTE REMOVED)
   - 5.4 (NOTE REMOVED)
   - 5.5 TIGHTEN TANK HOLD DOWN MOUNTING FASTENERS.

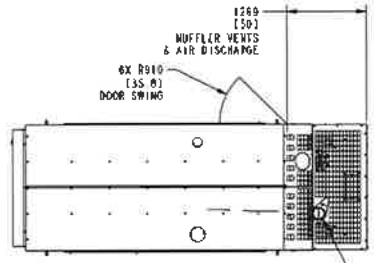

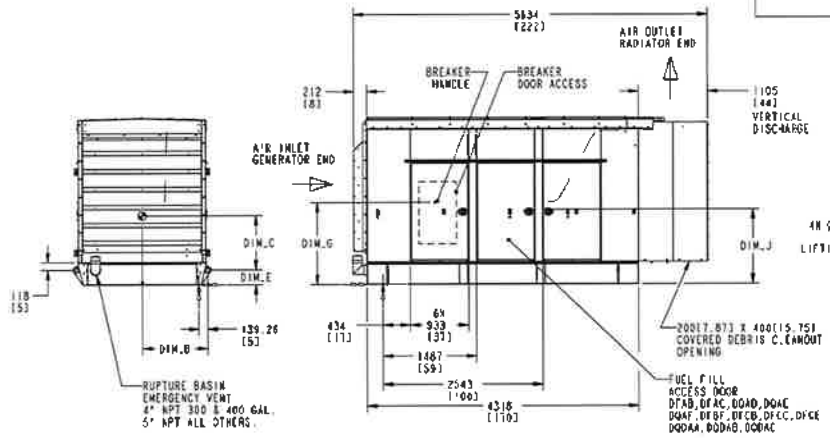

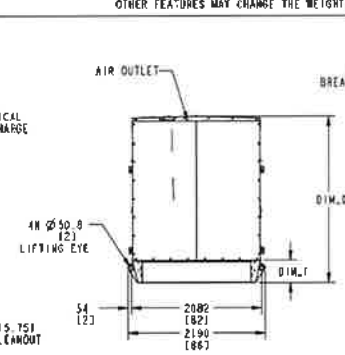

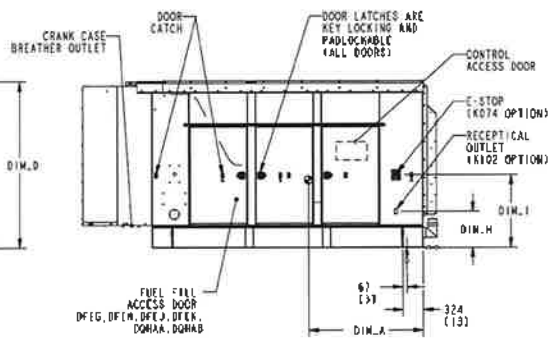

UNLESS OTHERWISE SPECIFIED, ALL DIMENSIONS ARE IN MILLIMETERS	WO# R5D0-3756	DRAWN L WRIGHT	CUMMINS POWER GENERATION
TOL: .X ±.1 .XX ±.05 .XXX ±0.10		CHK'D I MOGES	OUTLINE, ENCLOSURE
		APPD'D I MOGES	LEVEL 2F
ANG TOL: ±1.0°	SCALE: 1/32	DATE 09JUL10	SITE CODE
		DFA-DFE	PGF
			D A0341589

Drawing Name: A0341560 Revision: D
Part Name: A0341589 Revision: D
Sheet 1 of 5

Attachment O

Cummins Remote Operator Panel

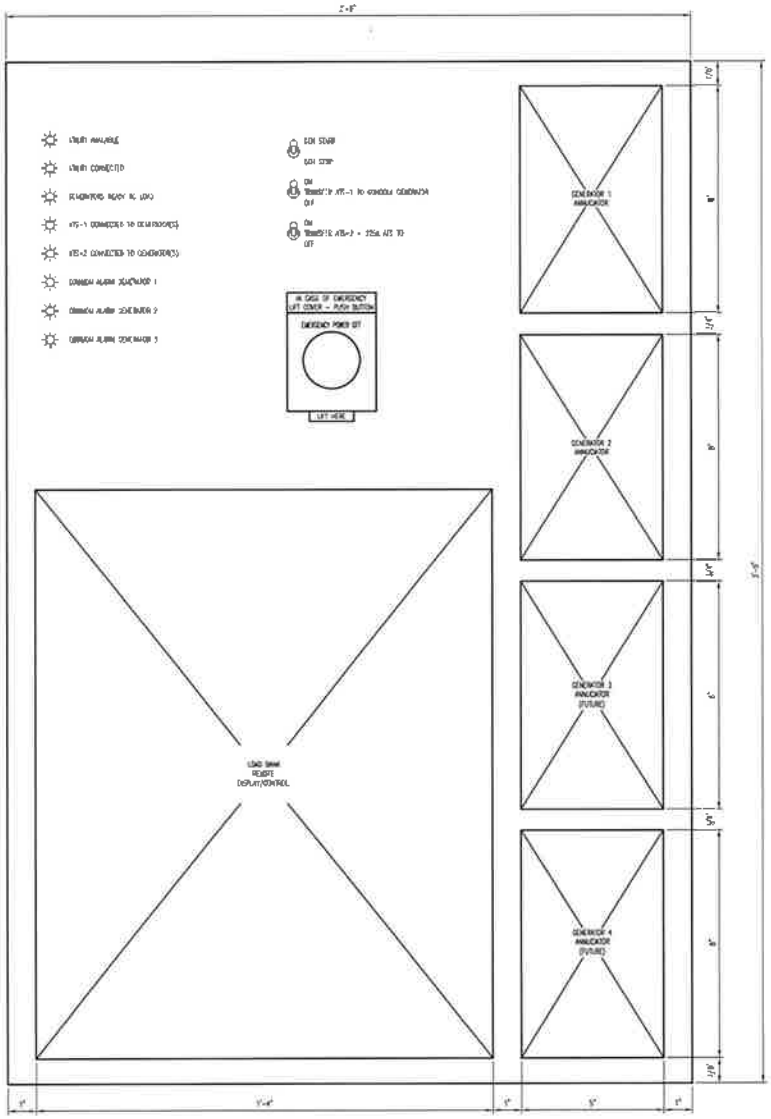

PROPOSED
INDICATOR AND CONTROL PANEL
SCALE 0"=1'-0"

COMPUTER SITES INC.
1225 SOUTH HURON
DENVER, CO 80223
303-871-0550

RESTRICTED & CONFIDENTIAL DOCUMENT

REVISIONS		
	DESCRIPTION	DATE

MOUNTAIN VIEW
PROPOSED GENERATOR
& ELECTRICAL UPGRADE

CHECK BOX IF DRAWING IS NOT PRINTED TO SCALE

DATE:
DRAWN BY:
CHECKED BY:
DWG SCALE:
FILE NAME:

PROJECT NO: –

SHEET TITLE: PROPOSED INDICTOR CONTROL PANEL

SHEET NO: A3
of

Attachment P

Cummins Sizing Data for 750s

Power Generation

Recommended Generator Report - 725GFLC

Project - Telluride

Comments -

Project Requirements

Frequency, Hz	: 60.0	**Generators Running in Parallel**	: 2
Duty	: Standby	**Site Altitude, ft(m)**	: 10500(3200)
Voltage	: 277/480, Series Wye	**Site Temperature, °C**	: 25
Phase	: 3	**Max. Altr Temp Rise, °C**	: 125
Fuel	: NaturalGas	**Project Voltage Distortion Limit, %**	: 10
Emissions	: EPA, stationary emergency application		

Calculated Individual Generator Set Load Running and Peak Requirements

Running kW	: 487.0	**Max. Step kW**	: 467.0 In Step 1	**Cumulative Step kW**	: 487.0
Running kVA	: 541.1	**Max. Step kVA**	: 541.1 In Step 1	**Cumulative Step kVA**	: 541.1
Running PF	: 0.9	**Peak kW**	: None	**Cumulative Peak kW**	: None
Running NLL kVA	: 541.1	**Peak kVA**	: None	**Cumulative Peak kVA**	: None
Alternator kW	: 762.93			**Pct Rated Capacity**	: 96.0

Total System Running Load and Step Load Requirements

Running kW	: 974.0	**Max. Step kW**	: 974.0	**Running NLL kVA**	: 1082.2
Running kVA	: 1082.2	**Max. Step kVA**	: 1082.2		

Generator Set Configuration

Alternator	: HC6H	**Engine**	: GTA50 CC
BCode	: B267	**Fuel**	: NaturalGas
Excitation	: PMG	**Displacement, cu in. (Litre)**	: 3067.0(50.3)
Voltage Range	: BR 208-240/416-480	**Cylinders**	: 16
Number of Leads	: 12	**Altitude Knee, ft(m)**	: 3000(914)
Reconnectable	: Yes	**Altitude Slope, % per 1000ft(304.8m)**	: 4
Full Single Phase Output	: Yes	**Temperature Knee, °F(°C)**	: 104(40)
Increased Motor Starting	: No	**Temperature Slope, % per 10°F(5.56°C)**	: 1
Extended Stack	: Yes	**Emissions**	: SI,EPA,Stat,40CFR1048
		Cooling Package	:

Set Performance		Load Requirements	
Running At	: 96.0% Rated Capacity		
Max. Step Voltage Dip, %	: 16	**Max. Allowed Step Voltage Dip**	: 35 In Step 1
Max. Step Frequency Dip, %	: 8	**Max. Allowed Step Frequency Dip**	: 10 In Step 1
Peak Voltage Dip, %	:	**Peak Voltage Dip Limit %**	: 35.0
Peak Frequency Dip, %	:	**Peak Frequency Dip Limit %**	: 10
Site Rated Standby kW/kVA	: 508 / 634	**Running kW**	: 487.0
		Running kVA	: 541.1
Site Rated Max. SkW	: 560	**Effective Step kW**	: 401.5
Max. SkVA	: 3313	**Effective Step kVA**	: 541.1
Temp Rise at Full Load, °C	: 125	**Percent Non-Linear Load**	: 100.0
Voltage Distortion	: 7.7	**Voltage Distortion Limit**	: 10
Site Rated Max Step kW Limit	:	**Max Step kW**	:

*Note: Higher temperature rise at full rated load.

*Note: All generator set power derates are based on open generator sets.

Note: GenSize output for lean burn natural gas generator sets is based on tests using natural gas with LHV of 33.44 mJ/Nm3 (905 BTU/ft3), and coolant return temperatures within the stated data sheet limits. For operation on gas with lower heating values or with MI lower than stated Data Sheet limit or coolant return temperatures greater than Data Sheet limits, consult application engineering.

Power Generation

Loads Summary Report

Project - Telluride

Comments -

Project Requirements

Frequency, Hz	: 60.0	**Generators Running in Parallel**	: 2
Duty	: Standby	**Site Altitude, ft(m)**	: 10500(3200)
Voltage	: 277/480, Series Wye	**Site Temperature, °C**	: 25
Phase	: 3	**Max. Altr Temp Rise, °C**	: 125
Fuel	: NaturalGas	**Project Voltage Distortion Limit, %**	: 10
Emissions	: EPA, stationary emergency application		

Loads Summary List

***Note: Detailed Loads and Step Report available below**

Step No.	Load Name	Quantity	Running		Starting		Peak		Dip Limits, %		VTHD% Limit
			kW	kVA	kW	kVA	kW	kVA	Vdip	Fdip	
Step01	500 hp vfd	2	414.44	460.49	414.44	460.49	None	None	35.0	10.0	10.0
Step01	40 hp vfd	4	33.16	36.84	33.16	36.84	None	None	35.0	10.0	10.0
Step01	7.5 hp vfd	2	6.22	6.91	6.22	6.91	None	None	35.0	10.0	10.0
Step Summary			487.0	541.0	487.0	541.0	None	None	35.0	10.0	10.0
Project Summary			Running		Max Starting		Cumulative Step		Cumulative Peak		Project VTHD% Limit
			kW	kVA	kW	kVA	kW	kVA	kW	kVA	
			487.0	541.1	487.0	541.1	487.0	541.1	0.0	0.0	10.0

***Note: Detailed Loads and Step Report available below**

Power Generation

Loads and Steps Detail Report

Project - Telluride

Comments -

Project Requirements

Frequency, Hz	: 60.0	**Generators Running in Parallel**	: 2
Duty	: Standby	**Site Altitude, ft(m)**	: 10500(3200)
Voltage	: 277/480, Series Wye	**Site Temperature, °C**	: 25
Phase	: 3	**Max. Altr Temp Rise, °C**	: 125
Fuel	: NaturalGas	**Project Voltage Distortion Limit, %**	: 10
Emissions	: EPA, stationary emergency application		

Calculated Individual Generator Set Load Running and Peak Requirements

Running kW	: 487.0	**Max. Step kW**	: 487.0 In Step 1	**Cumulative Step kW**	: 487.0
Running kVA	: 541.1	**Max. Step kVA**	: 541.1 In Step 1	**Cumulative Step kVA**	: 541.1
Running PF	: 0.9	**Peak kW**	: None	**Cumulative Peak kW**	: None
Running NLL kVA	: 541.1	**Peak kVA**	: None	**Cumulative Peak kVA**	: None
Alternator kW	: 762.93				

Step1

Calculated Individual Generator Set Step Load Requirements

Running kW	: 487.0	**Starting kW**	: 487.0	**Cumulative Step kW**	: 487.0
Running kVA	: 541.0	**Starting kVA**	: 541.0	**Cumulative Step kVA**	: 541.0
Running Amps	: 1303.0	**Starting Non-linear kVA**	: 541.0		
Running Non-linear kVA	: 541.0				
Alternator kW	: 762.93				
Voltage Distortion Limit for step	: 10				

500 hp vfd Three Phase Quantity : 2 In this Step

Category : Motor

Running kW	: 414.44	**Starting kW**	: 414.44	**Peak kW**	: None
Running kVA	: 460.49	**Starting kVA**	: 460.49	**Peak kVA**	: None
Running PF	: 0.9	**Starting PF**	: 0.9	**Cyclic**	: No
Running Amps	: 554.54	**Max. % Voltage Dip**	: 35.0	**Max. % Frequency Dip**	: 10.0
Running NLL kVA	: 460.49				
Starting NLL kVA	: 460.49			**Voltage**	: 480
Alternator kW	: 649.29				

Shaft Hp	: 500.0	**Type**	: Variable Frequency Drive
Shaft kW	: 373.0	**Ramp Details**	: None
Rectifier Type	: 6 pulse filtered	**THDI %**	: 13
Efficiency (%)	: 0.9	**THDV %**	: 10

Load Factor	: 100.0				

40 hp vfd			Three Phase	Quantity	: 4 In this Step
Category	: Motor				
Running kW	: 33.16	**Starting kW**	: 33.16	**Peak kW**	: None
Running kVA	: 36.84	**Starting kVA**	: 36.84	**Peak kVA**	: None
Running PF	: 0.9	**Starting PF**	: 0.9	**Cyclic**	: No
Running Amps	: 44.36	**Max. % Voltage Dip**	: 35.0	**Max. % Frequency Dip**	: 10.0
Running NLL kVA	: 36.84				
Starting NLL kVA	: 36.84			**Voltage**	: 480
Alternator kW	: 51.95				

Shaft Hp	: 40.0	**Type**	: Variable Frequency Drive
Shaft kW	: 29.84	**Ramp Details**	: None
Rectifier Type	: 6 pulse filtered	**THDI %**	: 13
Efficiency (%)	: 0.9	**THDV %**	: 10
Load Factor	: 100.0		

7.5 hp vfd			Three Phase	Quantity	: 2 In this Step
Category	: Motor				
Running kW	: 6.22	**Starting kW**	: 6.22	**Peak kW**	: None
Running kVA	: 6.91	**Starting kVA**	: 6.91	**Peak kVA**	: None
Running PF	: 0.9	**Starting PF**	: 0.9	**Cyclic**	: No
Running Amps	: 8.32	**Max. % Voltage Dip**	: 35.0	**Max. % Frequency Dip**	: 10.0
Running NLL kVA	: 6.91				
Starting NLL kVA	: 6.91			**Voltage**	: 480
Alternator kW	: 9.74				

Shaft Hp	: 7.5	**Type**	: Variable Frequency Drive
Shaft kW	: 5.6	**Ramp Details**	: None
Rectifier Type	: 6 pulse filtered	**THDI %**	: 13
Efficiency (%)	: 0.9	**THDV %**	: 10
Load Factor	: 100.0		

Power Generation

Steps and Dips Details Report

Project - Telluride

Project Requirements

Frequency, Hz	: 60.0	**Generators Running in Parallel**	: 2
Duty	: Standby	**Site Altitude, ft(m)**	: 10500(3200)
Voltage	: 277/480, Series Wye	**Site Temperature, °C**	: 25
Phase	: 3	**Max. Altr Temp Rise, °C**	: 125
Fuel	: NaturalGas	**Project Voltage Distortion Limit, %**	: 10
Emissions	: EPA, stationary emergency application		

Calculated Individual Generator Set Load Running and Peak Requirements

Running kW	: 487.0	**Max. Step kW**	: 487.0 In Step 1	**Cumulative Step kW**	: 487.0
Running kVA	: 541.1	**Max. Step kVA**	: 541.1 In Step 1	**Cumulative Step kVA**	: 541.1
Running PF	: 0.9	**Peak kW**	: None	**Cumulative Peak kW**	: None
Running NLL kVA	: 541.1	**Peak kVA**	: None	**Cumulative Peak kVA**	: None
Alternator kW	: 762.93				

Generator Set Configuration

Model	: 725GFLC	**Alternator**	: HC6H
Engine Model	: GTA50 CC	**Excitation**	: PMG
Fuel	: NaturalGas		

Step Level Dips Summary

Step #	Voltage Dip Limit (%)	Expected Step Voltage Dip (%)	Voltage Recovery Time (s) **	Frequency Dip Limit (%)	Expected Frequency Dip (%)	Frequency recovery Time (s) **
1	35	16	1.2	10	8	1.6

Note: Please refer to the model Spec. sheet for bandwidths used to report recovery times. For products manufactured in the United Kingdom it may be assumed that recovery times are based on ISO8528-5 G2 class bandwidths. Voltage and frequency recovery times are estimates. Typically, allow five to ten seconds between application of load steps when designing your system.

**Please note that in some cases the voltage and frequency recovery time estimates are not shown in list. This is a result of "dummy" data points temporarily being used to fill data gaps in the GenSize database. Please disregard these blank results.

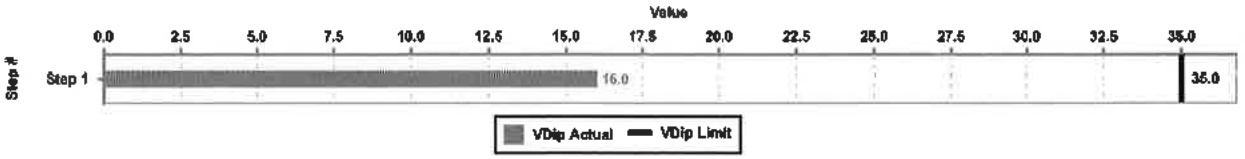
Value
0.0 2.5 5.0 7.5 10.0 12.5 15.0 17.5 20.0 22.5 25.0 27.5 30.0 32.5 35.0
Step #
Step 1
16.0
35.0
VDip Actual
VDip Limit

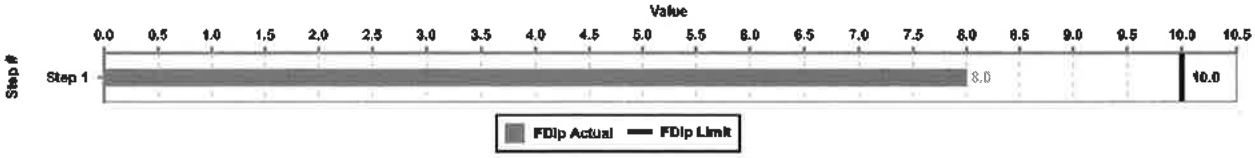
Value
0.0 0.5 1.0 1.5 2.0 2.5 3.0 3.5 4.0 4.5 5.0 5.5 6.0 6.5 7.0 7.5 8.0 8.5 9.0 9.5 10.0 10.5
Step #
Step 1
8.0
10.0
FDip Actual
FDip Limit

Attachment Q

Cummins Sizing Data for 600s

Power Generation

Recommended Generator Report - 600DQPAA

Project - Telluride

Comments -

Project Requirements

Frequency, Hz	: 60.0	**Generators Running in Parallel**	: 2
Duty	: Standby	**Site Altitude, ft(m)**	: 10500(3200)
Voltage	: 277/480, Series Wye	**Site Temperature, °C**	: 25
Phase	: 3	**Max. Altr Temp Rise, °C**	: 125
Fuel	: Diesel	**Project Voltage Distortion Limit, %**	: 10
Emissions	: EPA, stationary emergency application		

Calculated Individual Generator Set Load Running and Peak Requirements

Running kW	: 487.0	**Max. Step kW**	: 467.0 In Step 1	**Cumulative Step kW**	: 487.0
Running kVA	: 541.1	**Max. Step kVA**	: 541.1 In Step 1	**Cumulative Step kVA**	: 541.1
Running PF	: 0.9	**Peak kW**	: None	**Cumulative Peak kW**	: None
Running NLL kVA	: 541.1	**Peak kVA**	: None	**Cumulative Peak kVA**	: None
Alternator kW	: 762.93			**Pct Rated Capacity**	: 87.7

Total System Running Load and Step Load Requirements

Running kW	: 974.0	**Max. Step kW**	: 974.0	**Running NLL kVA**	: 1082.2
Running kVA	: 1082.2	**Max. Step kVA**	: 1082.2		

Generator Set Configuration

Alternator	: HC6G	**Engine**	: QSK19-G8
BCode	: B975	**Fuel**	: Diesel
Excitation	: PMG	**Displacement, cu in. (Litre)**	: 1150.0(18.8)
Voltage Range	: 208/416-240/480	**Cylinders**	: 6
Number of Leads	: 6	**Altitude Knee, ft(m)**	: 6102(1860)
Reconnectable	: Yes	**Altitude Slope, % per 1000ft(304.8m)**	: 2
Full Single Phase Output	: No	**Temperature Knee, °F(°C)**	: 104(40)
Increased Motor Starting	: No	**Temperature Slope, % per 18°F(10.0°C)**	: 7
Extended Stack	: No	**Emissions**	: EPA Tier 2
		Cooling Package	: high ambient

Set Performance		Load Requirements	
Running At	: 87.7% Rated Capacity		
Max. Step Voltage Dip, %	: 26	**Max. Allowed Step Voltage Dip**	: 35 In Step 1
Max. Step Frequency Dip, %	: 9	**Max. Allowed Step Frequency Dip**	: 10 In Step 1
Peak Voltage Dip, %	:	**Peak Voltage Dip Limit %**	: 35.0
Peak Frequency Dip, %	:	**Peak Frequency Dip Limit %**	: 10
Site Rated Standby kW/kVA	: 555 / 694	**Running kW**	: 487.0
		Running kVA	: 541.1
Site Rated Max. SkW	: 561	**Effective Step kW**	: 401.7
Max. SkVA	: 2944	**Effective Step kVA**	: 541.1
Temp Rise at Full Load, °C	: 125	**Percent Non-Linear Load**	: 100.0
Voltage Distortion	: 9.7	**Voltage Distortion Limit**	: 10
Site Rated Max Step kW Limit	:	**Max Step kW**	:

*Note: Higher temperature rise at full rated load.

*Note: All generator set power derates are based on open generator sets.

Power Generation

Loads Summary Report

Project - Telluride

Comments -

Project Requirements

Frequency, Hz	: 60.0	**Generators Running in Parallel**	: 2
Duty	: Standby	**Site Altitude, ft(m)**	: 10500(3200)
Voltage	: 277/480, Series Wye	**Site Temperature, °C**	: 25
Phase	: 3	**Max. Altr Temp Rise, °C**	: 125
Fuel	: Diesel	**Project Voltage Distortion Limit, %**	: 10
Emissions	: EPA, stationary emergency application		

Loads Summary List

***Note: Detailed Loads and Step Report available below**

Step No.	Load Name	Quantity	Running		Starting		Peak		Dip Limits, %		VTHD% Limit
			kW	kVA	kW	kVA	kW	kVA	Vdip	Fdip	
Step01	500 hp vfd	2	414.44	460.49	414.44	460.49	None	None	35.0	10.0	10.0
Step01	40 hp vfd	4	33.16	36.84	33.16	36.84	None	None	35.0	10.0	10.0
Step01	7.5 hp vfd	2	6.22	6.91	6.22	6.91	None	None	35.0	10.0	10.0
Step Summary			487.0	541.0	487.0	541.0	None	None	35.0	10.0	10.0
Project Summary			Running		Max Starting		Cumulative Step		Cumulative Peak		Project VTHD% Limit
			kW	kVA	kW	kVA	kW	kVA	kW	kVA	
			487.0	541.1	487.0	541.1	487.0	541.1	0.0	0.0	10.0

***Note: Detailed Loads and Step Report available below**

Power Generation

Loads and Steps Detail Report

Project - Telluride

Comments -

Project Requirements

Frequency, Hz	: 60.0	**Generators Running in Parallel**	: 2
Duty	: Standby	**Site Altitude, ft(m)**	: 10500(3200)
Voltage	: 277/480, Series Wye	**Site Temperature, °C**	: 25
Phase	: 3	**Max. Altr Temp Rise, °C**	: 125
Fuel	: Diesel	**Project Voltage Distortion Limit, %**	: 10
Emissions	: EPA, stationary emergency application		

Calculated Individual Generator Set Load Running and Peak Requirements

Running kW	: 487.0	**Max. Step kW**	: 487.0 In Step 1	**Cumulative Step kW**	: 487.0
Running kVA	: 541.1	**Max. Step kVA**	: 541.1 In Step 1	**Cumulative Step kVA**	: 541.1
Running PF	: 0.9	**Peak kW**	: None	**Cumulative Peak kW**	: None
Running NLL kVA	: 541.1	**Peak kVA**	: None	**Cumulative Peak kVA**	: None
Alternator kW	: 762.93				

Step1

Calculated Individual Generator Set Step Load Requirements

Running kW	: 487.0	**Starting kW**	: 487.0	**Cumulative Step kW**	: 487.0
Running kVA	: 541.0	**Starting kVA**	: 541.0	**Cumulative Step kVA**	: 541.0
Running Amps	: 1303.0	**Starting Non-linear kVA**	: 541.0		
Running Non-linear kVA	: 541.0				
Alternator kW	: 762.93				
Voltage Distortion Limit for step	: 10				

500 hp vfd Three Phase Quantity : 2 In this Step

Category : Motor

Running kW	: 414.44	**Starting kW**	: 414.44	**Peak kW**	: None
Running kVA	: 460.49	**Starting kVA**	: 460.49	**Peak kVA**	: None
Running PF	: 0.9	**Starting PF**	: 0.9	**Cyclic**	: No
Running Amps	: 554.54	**Max. % Voltage Dip**	: 35.0	**Max. % Frequency Dip**	: 10.0
Running NLL kVA	: 460.49				
Starting NLL kVA	: 460.49			**Voltage**	: 480
Alternator kW	: 649.29				

Shaft Hp	: 500.0	**Type**	: Variable Frequency Drive
Shaft kW	: 373.0	**Ramp Details**	: None
Rectifier Type	: 6 pulse filtered	**THDI %**	: 13
Efficiency (%)	: 0.9	**THDV %**	: 10

Load Factor	: 100.0				

40 hp vfd — Three Phase — Quantity : 4 In this Step

Category : Motor

Running kW	: 33.16	**Starting kW**	: 33.16	**Peak kW**	: None
Running kVA	: 36.84	**Starting kVA**	: 36.84	**Peak kVA**	: None
Running PF	: 0.9	**Starting PF**	: 0.9	**Cyclic**	: No
Running Amps	: 44.36	**Max. % Voltage Dip**	: 35.0	**Max. % Frequency Dip**	: 10.0
Running NLL kVA	: 36.84				
Starting NLL kVA	: 36.84			**Voltage**	: 480
Alternator kW	: 51.95				

Shaft Hp	: 40.0	**Type**	: Variable Frequency Drive
Shaft kW	: 29.84	**Ramp Details**	: None
Rectifier Type	: 6 pulse filtered	**THDI %**	: 13
Efficiency (%)	: 0.9	**THDV %**	: 10
Load Factor	: 100.0		

7.5 hp vfd — Three Phase — Quantity : 2 In this Step

Category : Motor

Running kW	: 6.22	**Starting kW**	: 6.22	**Peak kW**	: None
Running kVA	: 6.91	**Starting kVA**	: 6.91	**Peak kVA**	: None
Running PF	: 0.9	**Starting PF**	: 0.9	**Cyclic**	: No
Running Amps	: 8.32	**Max. % Voltage Dip**	: 35.0	**Max. % Frequency Dip**	: 10.0
Running NLL kVA	: 6.91				
Starting NLL kVA	: 6.91			**Voltage**	: 480
Alternator kW	: 9.74				

Shaft Hp	: 7.5	**Type**	: Variable Frequency Drive
Shaft kW	: 5.6	**Ramp Details**	: None
Rectifier Type	: 6 pulse filtered	**THDI %**	: 13
Efficiency (%)	: 0.9	**THDV %**	: 10
Load Factor	: 100.0		

Power Generation

Steps and Dips Details Report

Project - Telluride

Project Requirements

Frequency, Hz	: 60.0	**Generators Running in Parallel**	: 2
Duty	: Standby	**Site Altitude, ft(m)**	: 10500(3200)
Voltage	: 277/480, Series Wye	**Site Temperature, °C**	: 25
Phase	: 3	**Max. Altr Temp Rise, °C**	: 125
Fuel	: Diesel	**Project Voltage Distortion Limit, %**	: 10
Emissions	: EPA, stationary emergency application		

Calculated Individual Generator Set Load Running and Peak Requirements

Running kW	: 487.0	**Max. Step kW**	: 487.0 In Step 1	**Cumulative Step kW**	: 487.0
Running kVA	: 541.1	**Max. Step kVA**	: 541.1 In Step 1	**Cumulative Step kVA**	: 541.1
Running PF	: 0.9	**Peak kW**	: None	**Cumulative Peak kW**	: None
Running NLL kVA	: 541.1	**Peak kVA**	: None	**Cumulative Peak kVA**	: None
Alternator kW	: 762.93				

Generator Set Configuration

Model	: 600DQPAA	**Alternator**	: HC6G
Engine Model	: QSK19-G8	**Excitation**	: PMG
Fuel	: Diesel		high ambient

Step Level Dips Summary

Step #	Voltage Dip Limit (%)	Expected Step Voltage Dip (%)	Voltage Recovery Time (s) **	Frequency Dip Limit (%)	Expected Frequency Dip (%)	Frequency recovery Time (s) **
1	35	26	2.8	10	9	2.8

Note: Please refer to the model Spec. sheet for bandwidths used to report recovery times. For products manufactured in the United Kingdom it may be assumed that recovery times are based on ISO8528-5 G2 class bandwidths. Voltage and frequency recovery times are estimates. Typically, allow five to ten seconds between application of load steps when designing your system.

**Please note that in some cases the voltage and frequency recovery time estimates are not shown in list. This is a result of "dummy" data points temporarily being used to fill data gaps in the GenSize database. Please disregard these blank results.

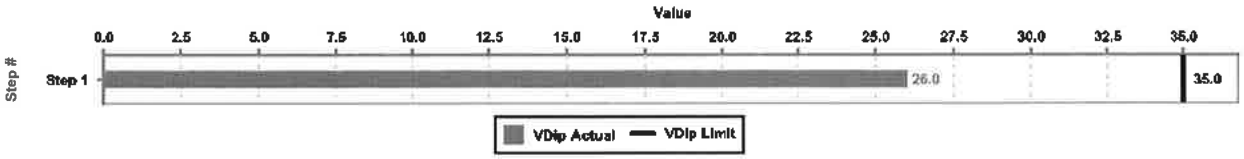
Value
0.0 2.5 5.0 7.5 10.0 12.5 15.0 17.5 20.0 22.5 25.0 27.5 30.0 32.5 35.0
Step #
Step 1
26.0
35.0
VDip Actual
VDip Limit

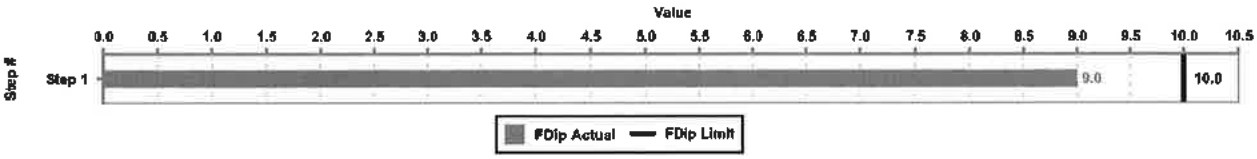
Value
0.0 0.5 1.0 1.5 2.0 2.5 3.0 3.5 4.0 4.5 5.0 5.5 6.0 6.5 7.0 7.5 8.0 8.5 9.0 9.5 10.0 10.5
Step #
Step 1
9.0
10.0
FDip Actual
FDip Limit

Attachment R

Cummins Sizing Data for 1250

Power Generation

Recommended Generator Report - 1250DQGAE

Project - Telluride

Comments -

Project Requirements

Frequency, Hz	: 60.0	**Generators Running in Parallel**	: 1
Duty	: Standby	**Site Altitude, ft(m)**	: 10500(3200)
Voltage	: 277/480, Series Wye	**Site Temperature, °C**	: 25
Phase	: 3	**Max. Altr Temp Rise, °C**	: 125
Fuel	: Diesel	**Project Voltage Distortion Limit, %**	: 10
Emissions	: EPA, stationary emergency application		

Calculated Individual Generator Set Load Running and Peak Requirements

Running kW	: 974.0	**Max. Step kW**	: 974.0 In Step 1	**Cumulative Step kW**	: 974.0
Running kVA	: 1082.2	**Max. Step kVA**	: 1082.2 In Step 1	**Cumulative Step kVA**	: 1082.2
Running PF	: 0.9	**Peak kW**	: None	**Cumulative Peak kW**	: None
Running NLL kVA	: 1082.2	**Peak kVA**	: None	**Cumulative Peak kVA**	: None
Alternator kW	: 1525.86			**Pct Rated Capacity**	: 91.9

Generator Set Configuration

Alternator	: P734C	**Engine**	: QSK50-G5 NR2
BCode	: B601	**Fuel**	: Diesel
Excitation	: PMG	**Displacement, cu in. (Litre)**	: 3069.0(50.3)
Voltage Range	: LV 480	**Cylinders**	: 16
Number of Leads	: 6	**Altitude Knee, ft(m)**	: 7874(2400)
Reconnectable	: Yes	**Altitude Slope, % per 1000ft(304.8m)**	: 6
Full Single Phase Output	: No	**Temperature Knee, °F(°C)**	: 104(40)
Increased Motor Starting	: No	**Temperature Slope, % per 18°F(10.0°C)**	: 15
Extended Stack	: No	**Emissions**	: EPA Tier 2
		Cooling Package	: high ambient

Set Performance / Load Requirements

Running At	: 91.9% Rated Capacity		
Max. Step Voltage Dip, %	: 22	**Max. Allowed Step Voltage Dip**	: 35 In Step 1
Max. Step Frequency Dip, %	: 6	**Max. Allowed Step Frequency Dip**	: 10 In Step 1
Peak Voltage Dip, %	:	**Peak Voltage Dip Limit %**	: 35.0
Peak Frequency Dip, %	:	**Peak Frequency Dip Limit %**	: 10
Site Rated Standby kW/kVA	: 1060 / 1325	**Running kW**	: 974.0
		Running kVA	: 1082.2
Site Rated Max. SkW	: 1304	**Effective Step kW**	: 859.8
Max. SkVA	: 5521	**Effective Step kVA**	: 1082.2
Temp Rise at Full Load, °C	: 80	**Percent Non-Linear Load**	: 100.0
Voltage Distortion	: 8.0	**Voltage Distortion Limit**	: 10
Site Rated Max Step kW Limit	:	**Max Step kW**	:

*Note: Higher temperature rise at full rated load.

*Note: All generator set power derates are based on open generator sets.

Power Generation

Loads Summary Report

Project - Telluride

Comments -

Project Requirements

Frequency, Hz	: 60.0	**Generators Running In Parallel**	: 1
Duty	: Standby	**Site Altitude, ft(m)**	: 10500(3200)
Voltage	: 277/480, Series Wye	**Site Temperature, °C**	: 25
Phase	: 3	**Max. Altr Temp Rise, °C**	: 125
Fuel	: Diesel	**Project Voltage Distortion Limit, %**	: 10
Emissions	: EPA, stationary emergency application		

Loads Summary List

***Note: Detailed Loads and Step Report available below**

Step No.	Load Name	Quantity	Running		Starting		Peak		Dip Limits, %		VTHD% Limit
			kW	kVA	kW	kVA	kW	kVA	Vdip	Fdip	
Step01	500 hp vfd	2	414.44	460.49	414.44	460.49	None	None	35.0	10.0	10.0
Step01	40 hp vfd	4	33.16	36.84	33.16	36.84	None	None	35.0	10.0	10.0
Step01	7.5 hp vfd	2	6.22	6.91	6.22	6.91	None	None	35.0	10.0	10.0
Step Summary			974.0	1082.0	974.0	1082.0	None	None	35.0	10.0	10.0

Project Summary	Running		Max Starting		Cumulative Step		Cumulative Peak		Project VTHD% Limit
	kW	kVA	kW	kVA	kW	kVA	kW	kVA	
	974.0	1082.2	974.0	1082.2	974.0	1082.2	0.0	0.0	10.0

***Note: Detailed Loads and Step Report available below**

Power Generation

Loads and Steps Detail Report

Project - Telluride

Comments -

Project Requirements

Frequency, Hz	: 60.0	**Generators Running in Parallel**	: 1
Duty	: Standby	**Site Altitude, ft(m)**	: 10500(3200)
Voltage	: 277/480, Series Wye	**Site Temperature, °C**	: 25
Phase	: 3	**Max. Altr Temp Rise, °C**	: 125
Fuel	: Diesel	**Project Voltage Distortion Limit, %**	: 10
Emissions	: EPA, stationary emergency application		

Calculated Individual Generator Set Load Running and Peak Requirements

Running kW	: 974.0	**Max. Step kW**	: 974.0 In Step 1	**Cumulative Step kW**	: 974.0
Running kVA	: 1082.2	**Max. Step kVA**	: 1082.2 In Step 1	**Cumulative Step kVA**	: 1082.2
Running PF	: 0.9	**Peak kW**	: None	**Cumulative Peak kW**	: None
Running NLL kVA	: 1082.2	**Peak kVA**	: None	**Cumulative Peak kVA**	: None
Alternator kW	: 1525.86				

Step1

Calculated Individual Generator Set Step Load Requirements

Running kW	: 974.0	**Starting kW**	: 974.0	**Cumulative Step kW**	: 974.0
Running kVA	: 1082.0	**Starting kVA**	: 1082.0	**Cumulative Step kVA**	: 1082.0
Running Amps	: 1303.0	**Starting Non-linear kVA**	: 1082.0		
Running Non-linear kVA	: 1082.0				
Alternator kW	: 1525.86				
Voltage Distortion Limit for step	: 10				

500 hp vfd Three Phase Quantity : 2 In this Step

Category : Motor

Running kW	: 414.44	**Starting kW**	: 414.44	**Peak kW**	: None
Running kVA	: 460.49	**Starting kVA**	: 460.49	**Peak kVA**	: None
Running PF	: 0.9	**Starting PF**	: 0.9	**Cyclic**	: No
Running Amps	: 554.54	**Max. % Voltage Dip**	: 35.0	**Max. % Frequency Dip**	: 10.0
Running NLL kVA	: 460.49				
Starting NLL kVA	: 460.49			**Voltage**	: 480
Alternator kW	: 649.29				

Shaft Hp	: 500.0	**Type**	: Variable Frequency Drive
Shaft kW	: 373.0	**Ramp Details**	: None
Rectifier Type	: 6 pulse filtered	**THDI %**	: 13
Efficiency (%)	: 0.9	**THDV %**	: 10

Load Factor	: 100.0				

40 hp vfd — Three Phase — Quantity : 4 In this Step

Category : Motor

Running kW	: 33.16	**Starting kW**	: 33.16	**Peak kW**	: None
Running kVA	: 36.84	**Starting kVA**	: 36.84	**Peak kVA**	: None
Running PF	: 0.9	**Starting PF**	: 0.9	**Cyclic**	: No
Running Amps	: 44.36	**Max. % Voltage Dip**	: 35.0	**Max. % Frequency Dip**	: 10.0
Running NLL kVA	: 36.84				
Starting NLL kVA	: 36.84			**Voltage**	: 480
Alternator kW	: 51.95				

Shaft Hp	: 40.0	**Type**	: Variable Frequency Drive
Shaft kW	: 29.84	**Ramp Details**	: None
Rectifier Type	: 6 pulse filtered	**THDI %**	: 13
Efficiency (%)	: 0.9	**THDV %**	: 10
Load Factor	: 100.0		

7.5 hp vfd — Three Phase — Quantity : 2 In this Step

Category : Motor

Running kW	: 6.22	**Starting kW**	: 6.22	**Peak kW**	: None
Running kVA	: 6.91	**Starting kVA**	: 6.91	**Peak kVA**	: None
Running PF	: 0.9	**Starting PF**	: 0.9	**Cyclic**	: No
Running Amps	: 8.32	**Max. % Voltage Dip**	: 35.0	**Max. % Frequency Dip**	: 10.0
Running NLL kVA	: 6.91				
Starting NLL kVA	: 6.91			**Voltage**	: 480
Alternator kW	: 9.74				

Shaft Hp	: 7.5	**Type**	: Variable Frequency Drive
Shaft kW	: 5.6	**Ramp Details**	: None
Rectifier Type	: 6 pulse filtered	**THDI %**	: 13
Efficiency (%)	: 0.9	**THDV %**	: 10
Load Factor	: 100.0		

Power Generation

Steps and Dips Details Report

Project - Telluride

Project Requirements

Frequency, Hz	: 60.0	**Generators Running in Parallel**	: 1
Duty	: Standby	**Site Altitude, ft(m)**	: 10500(3200)
Voltage	: 277/480, Series Wye	**Site Temperature, °C**	: 25
Phase	: 3	**Max. Altr Temp Rise, °C**	: 125
Fuel	: Diesel	**Project Voltage Distortion Limit, %**	: 10
Emissions	: EPA, stationary emergency application		

Calculated Individual Generator Set Load Running and Peak Requirements

Running kW	: 974.0	**Max. Step kW**	: 974.0 In Step 1	**Cumulative Step kW**	: 974.0
Running kVA	: 1082.2	**Max. Step kVA**	: 1082.2 In Step 1	**Cumulative Step kVA**	: 1082.2
Running PF	: 0.9	**Peak kW**	: None	**Cumulative Peak kW**	: None
Running NLL kVA	: 1082.2	**Peak kVA**	: None	**Cumulative Peak kVA**	: None
Alternator kW	: 1525.86				

Generator Set Configuration

Model	: 1250DQGAE	**Alternator**	: P734C
Engine Model	: QSK50-G5 NR2	**Excitation**	: PMG
Fuel	: Diesel		high ambient

Step Level Dips Summary

Step #	Voltage Dip Limit (%)	Expected Step Voltage Dip (%)	Voltage Recovery Time (s) **	Frequency Dip Limit (%)	Expected Frequency Dip (%)	Frequency recovery Time (s) **
1	35	22	1.5	10	6	2.2

Note: Please refer to the model Spec. sheet for bandwidths used to report recovery times. For products manufactured in the United Kingdom it may be assumed that recovery times are based on ISO8528-5 G2 class bandwidths. Voltage and frequency recovery times are estimates. Typically, allow five to ten seconds between application of load steps when designing your system.

**Please note that in some cases the voltage and frequency recovery time estimates are not shown in list. This is a result of "dummy" data points temporarily being used to fill data gaps in the GenSize database. Please disregard these blank results.

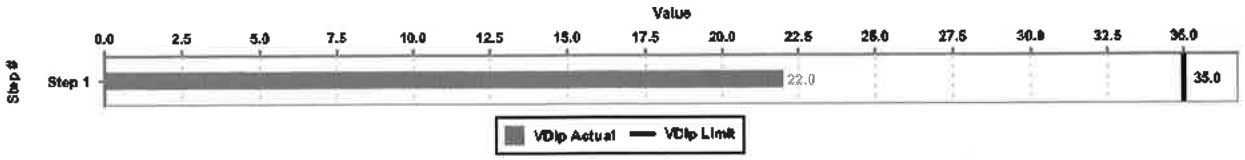
Value
0.0
2.5
5.0
7.5
10.0
12.5
15.0
17.5
20.0
22.5
25.0
27.5
30.0
32.5
35.0
Step #
Step 1
22.0
35.0
VDip Actual
VDip Limit

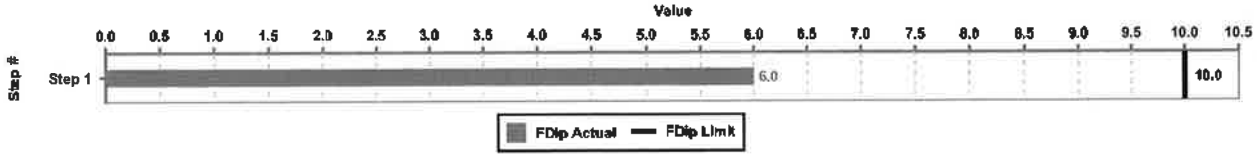
Value
0.0
0.5
1.0
1.5
2.0
2.5
3.0
3.5
4.0
4.5
5.0
5.5
6.0
6.5
7.0
7.5
8.0
8.5
9.0
9.5
10.0
10.5
Step #
Step 1
6.0
10.0
FDip Actual
FDip Limit

Attachment S

Square 'D' page 11 "Table 7: Altitude Derating Values per ANSI C37.20.1 Table 10"

Enclosure Sizes

All type ET electronic trip UL/IEC M-frame, P-frame and R-frame circuit breakers are available as standard rated circuit breakers. Micrologic electronic trip UL/IEC circuit breakers are also available in 100% rated constructions. Because the additional heat generated when applying circuit breakers at 100% of continuous current rating, the use of specially designed enclosures and 194° F (90°C) rated wire sized per the 167° F (75°C) NEC chart is required.

Circuit breakers with 100% rating can also be used in applications requiring only 80% continuous loading.

Table 5: Minimum Enclosure Sizes for Fixed-Mounted Circuit Breakers

Circuit Breaker Rating	Enclosure Dimensions (h x w x d) in./(mm)		Ventilation Area			
	3P Circuit Breaker	4P Circuit Breaker	Top		Bottom	
M-Frame, ≤ 800 A, Standard Rated	51.9 x 20.25 x 7.75 (1318.3 x 514.4 x 196.9)	51.9 x 23.01 x 7.75 (1318.3 x 584.4 x 196.9)	—	—	—	—
P-Frame, ≤ 800 A, 100% Rated P-Frame, ≤ 1200 A, Standard Rated	51.9 x 20.25 x 7.75 (1318.3 x 514.4 x 196.9)	51.9 x 23.01 x 7.75 (1318.3 x 584.4 x 196.9)	—	—	—	—
P-Frame, ≤ 1200 A, 100% Rated	62.25 x 23 x 14.75 (1581.2 x 584.2 x 374.7)	62.25 x 25.76 x 14.75 (1581.2 x 654.2 x 374.7)	16.5 in.	10,645 mm	16.5 in.	10,645 mm
R-Frame, Standard Rated[1]	30 x 21 x 7 (762 x 533 x 178)	30 x 25.5 x 7 (762 x 648 x 178)	—	—	—	—
R-Frame, 100% Rated[1]	30 x 21 x 7 (762 x 533 x 178)	30 x 25.5 x 7 (762 x 648 x 178)	40.25 in.	26,000 mm	40.25 in.	26,000 mm

[1] RLTB or RL3TB kits may extend beyond end of enclosure when using minimum enclosure size.

Operating Conditions

Temperature

To meet the requirements of the UL489 Standard, molded case circuit breakers are designed, built and calibrated for use on 50/60 Hz ac systems in a 40°C (104°F) ambient environment. Electronic trip circuit breakers, however, are designed to react only to the magnitude of the current flowing through the circuit breaker and are inherently ambient insensitive. Both UL/IEC and IEC-only circuit breakers may be operated at temperatures between -25°C and +70°C (-13°F and 158°F). For temperatures other than 40°C (104°F), the circuit breakers must be re-rated as shown.

Table 6: Temperature Re-rating Values

Maximum Ambient Temperature													
°F	158	140	122	104	86	77	68	50	32	14	-4	-13	-22
°C	70	60	50	40	30	25	20	10	0	-10	-20	-25	-30
Current	0.75	0.83	0.92	1.00	1.07	1.11	1.14	1.21	1.27	1.33	1.39	1.42	1.44

Altitude

Circuit breakers are suitable for use at altitudes up to 13,100 ft. (4000 m). For altitudes higher than 6560 ft. (2000 m), circuit breakers must be derated as shown.

Table 7: Altitude Derating Values Per ANSI C37.20.1 Table 10

Altitude	≤ 6,600 ft. (≤ 2,000 m)	8,500 ft. (2,600 m)	13,000 ft. (3,900 m)
Voltage	1.00	0.95	0.80
Current	1.00	0.99	0.96

© 2001–2016 Schneider Electric
All Rights Reserved

Doppelmayr

Town of Mountain Village
STANDBY POWER GENERATION
Gondola Sections 1 & 2
St. Sophia Station

QUOTATION

August 19, 2016

Prepared by:
Randy Woolwine / Shawn Marquardt
Doppelmayr USA Inc
Registered in the State of Colorado

CONTENTS

CONTRACTOR QUALIFICATIONS 3
EQUIPMENT DESCRIPTION 3
GENERAL FEATURES 3
TECHNICAL SPECIFICATIONS 4
GENERAL DATA 4
GENERATOR DATA 4
PROJECT RESPONSIBILITIES 5
INSTALLATION 5
PRICE& TERMS 7
PROJECT PRICING 7
OPTIONS FOR CONSIDERATION 7
DELIVERY 7
TERMS OF PAYMENT 8
WARRANTY 8
INSURANCE AND LIABILITY 9
AGREEMENT 9
DIESEL GENERATOR MANUFACTURER SUBMITTAL 10
BI-FUEL GENERATOR MANUFACTURER SUBMITTAL 19

CONTRACTOR QUALIFICATIONS

- Doppelmayr has been in business in Colorado with an office maintained in the state since 1984. Worldwide we have been in business over 125 years with clients in almost every country in the world.
- Doppelmayr has extensive experience providing standby power generation solutions for passenger ropeways, 3 examples listed below:
  1. Canyons Village at Park City – Park City, UT
     Orange Bubble Express Chairlift, 2012
  2. Beaver Creek Resort – Avon, CO
     Centennial Express Chondola, 2014
  3. Park City Resort – Park City, UT
     Quicksilver Gondola, 2015
- Doppelmayr has done business in the state of CO on similar projects, 3 references listed below:
  1. Steamboat Resort – Steamboat Springs, CO
     Contact Doug Allen – 970-871-5319
  2. Telluride Resort – Telluride, CO
     Contact Ken King – 970-729-0694
  3. Beaver Creek Resort – Avon, CO
     Contact Phil Patterson- 970-754-5110
- Doppelmayr is in good standing with the local transit associations in Colorado and other States within the USA.

EQUIPMENT DESCRIPTION

GENERAL FEATURES

Certified to ISO 9001:2008 Standards

Engineering and drawing package included

Operation and maintenance manual included from generator supplier

Factory supervision of Acceptance Test

TECHNICAL SPECIFICATIONS

GENERAL DATA

No change to existing gondola operational specifications
Supply Voltage from Generator.....3PH 480VAC
Power Frequency .....60 Hertz
Ability to start main drives at full capacity.....616 kW
Ability to start tire conveyor drives at full capacity .....131 kW
Ability to absorb stopping power for downhill load.....-731 kW
Ability to supply shop loads.....30 kW
Expandable for Future capacity increases
Fuel storage for 24 hours of full load operation
Weather-proof enclosure with vent louvers
Level 2 sound attenuation
Sized for high altitude operation (10,540' ASL)
Automatic Transfer Switch operated by key-switch from central operator location
Automatic shutdown of 2 existing 10kVA Photovoltaic Controllers

GENERATOR DATA

Reference Generator Manufacturer Submittal Package Attached

PROJECT RESPONSIBILITIES

INSTALLATION

Doppelmayr (Seller) and Buyer will provide labor and materials as shown below for this Project:

		Seller	Buyer	NA
	Permits and Survey			
1.	Construction survey of generator site		X	
2.	Legal property line surveys		X	
3.	Supply all permits and authorizations (including costs and fees)		X	
	Engineering and Civil Installation			
4.	Excavate generator site		X	
5.	Pour concrete pad for generator placement		X	
6.	Provide size requirements for concrete pad in order to accommodate generator placement.	X		
7.	Concrete test reports (included with Construction Engineering)		X	
8.	Site engineering inspections		X	
9.	Foundation or concrete work required for installation of new machinery		X	
10.	Provide electrical conduit as needed to go from generator room to main switch gear service entry	X		
11.	Transport new equipment from Telluride Ski Maintenance shop to final destination		X	
12.	Suitable equipment staging in climate controlled environment for electrical equipment		X	
13.	Firefighting and fire suppression equipment as required by local authorities		X	
14.	Interface with existing utilities or permanent structures		X	
15.	Locate underground services (if required)		X	

	Mechanical Installation			
16.	Install generator onto concrete pad	X		
	Electrical Installation			
17.	Install and test standby generator	X		
18.	Provide and Install supply cables from transfer switch to main service entrance	X		
19.	Provide and install transfer switch	X		
20.	Provide and Install control cable from main control room to transfer switch	X		
	Completion and Testing			
21.	Provide construction certificates		X	
22.	Provide design certificate for equipment which is supplied by seller	X		
23.	Provide construction schedule that shows plan for meeting the RFP installation timeframe	X*		
24.	Final preoperational testing	X	X	
25.	Notify CPTSB and schedule acceptance test		X	
26.	Labor and ballast for acceptance test		X	

*Project completion is not possible in 2016 based on generator delivery time, estimated at 12 weeks after submittal.

PRICE& TERMS

PROJECT PRICING

- Engineering
- Equipment
- Freight to site
- Bond Not Included in Project Pricing – Will be addressed pending project commencement
- Indemnification Not Included in Project Pricing – Will be addressed pending project commencement

$663,443.00

OPTIONS FOR CONSIDERATION

Diesel/NG Bi Fuel Generator Power Units .....$ 111,039.00

(2) 5 year extended Generator Manufacturer Warranties ...$ 3,978.00

(2) 7 year extended Generator Manufacturer Warranties ...$ 7,760.00

(2) 10 year extended Generator Manufacturer Warranties .$ 12,754.00 787,236.00

Total with Options .....$ _____

Above prices are valid only for installation within 9 months of date of this quotation and based upon receipt of the signed Contract and down payment as specified under the Terms of Payment shown below. This quote is based on information supplied by the Buyer. Local/State taxes; if any, are not included. Price is subject to revision based on acceptance of equipment by Buyer. Prices are valid for 30 days from date of this quotation. Freight is FOB Telluride Ski Maintenance shop. Project pricing is subject to CPI annual adjustment at published rates if project commencement is delayed beyond June 15, 2017.

DELIVERY

Completion to be determined based on Contract signing date and receipt of payments as specified under Terms of Payment shown below. Delivery dates, and critical milestone dates will be determined at the time of Contract signing.

TERMS OF PAYMENT

Payments shall be made according to the following schedule. Partial invoices shall be allowed for partial completion of the milestones listed below. The amounts listed below are payable within fifteen (15) days of the invoice date. All past due amounts accrue interest from the date of the invoice to the date the payment is received at an annual rate of eighteen percent (18%) or two percent (2%) over the prime rate whichever is higher.

Initial down payment upon Contract signing	30%
Upon procurement of Generator and Components	30%
Upon delivery of Generator and Components	30%
Upon completion of acceptance test	10%
TOTAL	100.00%

WARRANTY

When used and maintained in accordance with the maintenance and operation manual provided by Seller to Buyer, Seller warrants that the equipment when delivered to Buyer, shall be of merchantable quality and free from defect in materials and workmanship for one (1) years from the date of delivery by Seller or its authorized dealer or 5000 hours of operation, whichever comes first (the "Warranty Period"). During the Warranty Period Seller agrees to supply Buyer, without charge, with replacement parts for any part of the Lift that is defective as to material or workmanship. All replacement parts shall be installed at Buyer's cost and expense. Labor excluded on Non-Turnkey projects unless Seller chooses to repair a component on site in lieu of providing a replacement. Notwithstanding the foregoing, under no circumstances shall Seller be under any obligation to contribute to the cost for normal maintenance and repairs to the Lift or non-defective items requiring replacement as a result of ordinary use or wear and tear during the Warranty Period.

Notwithstanding anything in this Contract to the contrary, the warranty period for any component parts and equipment included in the project which are supplied by third party vendors not affiliated with Seller, shall be limited to the applicable terms and limitations of the warranty provided by such third party vendors to Seller. Further, Seller shall not be liable for breach of its warranties as set forth in this Contract, if such breach is caused by: (a) force majeure or any other cause beyond Seller's reasonable control; (b) alteration, modification or change in the Work or Lift and/or use of component parts or equipment supplied by parties other than Seller, except when done according to plans and specifications specifically referring to such additional work and warranted by Seller in writing; (c) improper maintenance, operation or use of the Lift; (d) abnormal wind conditions; (e) damages caused by abrasives, dirt or corrosion; (f) improper cable alignment or lubrication; (g) any error in any geographical investigation or estimate of

snow depth or in any engineering or other information supplied by Buyer or its agents to Seller; or (h) improper or defective installation of the Lift. The right to require the replacement of a defective part shall be Buyer's sole remedy for any breach of the warranties as set forth in this Contract. Seller specifically disclaims any other obligation, expressed or implied. **EXCEPT AS SPECIFICALLY DESCRIBED IN THIS PARAGRAPH, THERE ARE NO OTHER WARRANTIES EXPRESS OR IMPLIED. ALL OTHER WARRANTIES, EXPRESSED OR IMPLIED, INCLUDING THE IMPLIED WARRANTIES OF MERCHANTABILITY AND FITNESS FOR A PARTICULAR PURPOSE, ARE EXCLUDED.**

INSURANCE AND LIABILITY

Worker's compensation and liability insurance will be provided to meet the requirements as outlined in the Town of Mountain Village RFP dated July 28,2016.

AGREEMENT

This Agreement is made contingent upon the Buyer's Town Council (Town of Mountain Village Town Council) appropriating the funds in the Buyer's 2016 budget cycle. In the event the Buyer fails to appropriate the funds in the Buyers 2016 budget cycle, the obligations of the parties shall be null and void upon the Buyer providing Seller with notice of such non-appropriation.

Seller requires signed contract and notice to proceed by September 9, 2016 in order to perform according to Buyer's proposed schedule (installation during spring 2017 maintenance period)

DIESEL GENERATOR MANUFACTURER SUBMITTAL

Quantity two (2)

- Generac Industrial Diesel engine-driven generator set with turbocharged/aftercooled 6-cylinder 18.1L engine, consisting of the following features and accessories

?

- 600 kW Rating, wired for 277/480 VAC three phase, 60 Hz
- MPS – Parallel Unit
- Permanent Magnet Excitation
- Stationary Emergency-Standby rated
- UL2200
- EPA Certified
- SCAQMD
- Power Manager Digital Control Platform configured for Generac Modular Power System's Paralleling Controller (PM-PC)
    - 32 bit microprocessor structured with: real-time clock, 47 inputs, 32 outputs, 2 – RS232 ports, 2 – RS485 ports, RJ45 modem port, CANbus port
    - +/-1.0% digital voltage regulator with: 3 phase RMS sensing, soft-start voltage ramping – adjustable, loss of sensing protection – adjustable, negative power limit – adjustable, Hi/Lo voltage limit – adjustable, V/F slope and gain – adjustable, fault protection, encapsulated and sealed
    - 0.25% digital frequency regulation with: soft-start ramping – adjustable, gain – adjustable, overshoot limit – adjustable
    - On-board PLC for customer configuration with: 24 digital inputs, 43 analog inputs, 24 digital open-collector outputs – 30 vdc, 16 timers, 16 counters
    - Programmable touch screen engine control and monitoring module with: Auto/Manual/Off key switch, Alarm LED, Not in Auto LED, audible alarm, emergency stop switch, 30-page readout including: Oil Pressure and optional Oil Temp, Coolant Temp and Level, Fuel Level (where applicable), Engine Speed, DC Battery Voltage, Run-time Hours, Generator Voltages, Amps, Frequency, Power, Power Factor, Alarm Status: Low or High AC Voltage, Low or High Battery Voltage, Low or High Frequency, Pre-low or Low Oil Pressure, Pre-high or High Oil Temp (optional), Low Water Level and Temp, Pre-high or High Engine Temp, High, Low, and Critical-low Fuel Level (where applicable), Overcrank, Over and Under Speed, Unit Not in Automatic
- Level 2 Acoustic Enclosure, Steel
    - Motorized Dampers

- Industrial grey Baked-On Powder Coat Finish
- Battery Heating Pad
- 12 Position Load Center, unit mounted
- Standard 2-Year Limited warranty
- Battery Charger, 10 Amp, NFPA 110 compliant, installed
- 225 AH, 1155 CCA Group 8D Batteries, with rack, installed
- AC/DC Light Kit
- Std set of 3 Manuals
- 120V GFCI and 240V Outlet
- Coolant Heater, 2500W, 240VAC
- 36" 1001 Gallon Double-Wall UL142 Basetank
  - Mechanical fuel level indicator gauge
  - Electronic fuel level sender
- MLCB, 80% rated thermal-magnetic
  - 1000
- MD0600KG22181D18GPLY2
- Freight
- Start-up
- 4 hour load banking

Table of Contents

SPECIFICATION SHEET	
0197230SBY	SPEC SHEET MD600 18.1L G22
CONTROL PANEL AND OPTIONS	
0169060SBY	SPEC SHEET PM-DCP
0183530SSD	MPS PARALLELING SW DATA
ALTERNATOR AND OPTIONS	
0179090SSB	THERMAL DAMAGE CURVE WEG
0187880SBY	GENPROTECT DATA SHEET
UNIT OPTIONS	
0161970SBY	BATTERY INDEX
0180230SBY	SPEC SHEET RHINO COAT
0189370SSD	EATON CB TABLE THERM/MAG
0191900SBY	2.5A & 10A BATT CHRGR H&G
0197620SSD	BATTERY WARMER PAD SUBMIT
0K5958_SBM	HEATER BLOCK 2500W240V SUBM IN-BLOCK HTR 1500W 120V
0L2792	BLOCK HTR 1500W 120V
10000001143	0J4966D
INSTALLATION DRAWINGS	
0194070SSD	MPS LUG REFERENCE
0K1510	INSTALL OPEN MPS D18.1L 600KW
0K1837	INSTALL H-GROUP BASETANKS G22
GENSET ELECTRICAL DRAWINGS	
0K0984	WD D12.5/15.2/18.1L G22 PM-PC
0K0985	SD D12.5/15.2/18.1L G22 PM-PC
SYSTEM INTERCONNECT DRAWINGS	
0K4532	ONE-LINE MPS W/PMSC
EMISSIONS DATA	
0L2031A	EMISSIONS SD/MD600 D18.1 2015
10000000874	EMISSIONS SD/MD600 D18.1 2016
CERTIFICATIONS	
0184520SSD	QUALITY CERTIFICATION DOC
0K6347	ISO CERTIFICATE 9001 : 20
0L2170	2015 EPA CERT 18.1L PERKINS
10000001036	2016 EPA CERT GCPXL18.1NYS-005

MD600 | 18.1L | 600 kW

INDUSTRIAL DIESEL GENERATOR SET

EPA Certified Stationary Emergency

GENERAC | INDUSTRIAL POWER

STANDBY POWER RATING

600 kW, 750 kVA, 60 Hz

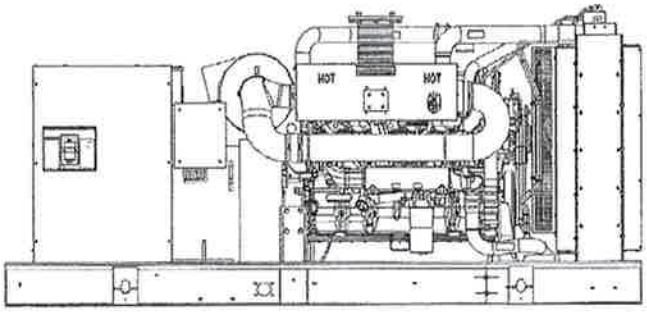

ISO 9001 2008

* Built in the USA using domestic and foreign parts

* EPA Certified Prime ratings are not available in the US or its Territories

** Certain options or customization may not hold certification valid

Image used for illustration purposes only

CODES AND STANDARDS

Generac products are designed to the following standards:

- UL2200, UL508, UL142, UL498
- NFPA70, 99, 110, 37
- NEC700, 701, 702, 708
- ISO9001, 8528, 3046, 7637, Pluses #2b, 4
- NEMA ICS10, MG1, 250, ICS6, AB1
- ANSI C62.41

POWERING AHEAD

For over 50 years, Generac has led the industry with innovative design and superior manufacturing.

Generac ensures superior quality by designing and manufacturing most of its generator components, including alternators, enclosures and base tanks, control systems and communications software.

Generac's gensets utilize a wide variety of options, configurations and arrangements, allowing us to met the Standby power needs of practically every application.

Generac searched globally to ensure the most reliable engines power our generator. We choose only engines that Have already been proven in heavy-duty industrial application under adverse conditions.

Generac is committed to ensuring out customer's service support continues after their generator purchase.

SPEC SHEET

1 OF 6

MD600 | 18.1L | 600 kW

INDUSTRIAL DIESEL GENERATOR SET

EPA Certified Stationary Emergency

GENERAC | INDUSTRIAL POWER

STANDARD FEATURES

ENGINE SYSTEM

General

- Oil Drain Extension
- Air Cleaner
- Fan Guard
- Stainless Steel flexible exhaust connection
- Critical Exhaust Silencer (Enclosed Only)
- Factory Filled Oil
- Engine Block Heater

Fuel System

- Flexible Fuel Lines
- Primary and Secondary Fuel Filters

Cooling System

- Closed Coolant Recovery System
- UV/Ozone resistant hoses
- Factory-installed Radiator
- 50/50 Ethylene glycol antifreeze

Engine Electrical System

- Battery charging alternator
- Battery cables
- Battery tray
- Solenoid activated starter motor
- Rubber-booted engine electrical connections

ALTERNATOR SYSTEM

- Class H insulation material
- 2/3 Pitch
- Skewed Stator
- Permanent Magnet Excitation
- Sealed Bearings
- Amortisseur winding
- Full load capacity alternator

GENERATOR SET

- Internal Genset Vibration Isolation
- Separation of circuits - high/low voltage
- Separation of circuits - multiple breakers
- Wrapped Exhaust Piping (enclosed only)
- Standard Factory Testing
- 2 Year Limited Warranty (Standby rated units)
- Silencer mounted in the discharge hood (enclosed only)

ENCLOSURE (IF SELECTED)

- Rust-proof fasteners with nylon washers to protect finish
- High performance sound-absorbing material (L1 & L2)
- Gasketed doors
- Stamped air-intake louvers
- Upward pointing radiator discharge hood
- Stainless steel lift off door hinges
- Stainless steel lockable handles
- Rhino Coat™ - Textured polyester powder coat

TANKS (IF SELECTED)

- UL 142
- ULC S-601 Tank
- Double wall
- Vents
- Sloped top
- Sloped bottom
- Factory Pressure Tested (2 psi)
- Rupture basin alarm
- Electric Fuel Level
- Check valve in supply and return lines
- Rhino Coat™ - Textured polyester powder coat tank
- Stainless Steel Hardware

CONTROL SYSTEM

Control Panel

- Digital G-200 Paralleling Control Panel - Touchscreen
- Programmable Crank Limiter
- 7-Day Programmable Exerciser
- Special Applications Programmable PLC
- RS-232/485
- All-Phase Sensing OVR
- Full System Status
- Utility Monitoring
- Low Fuel Level
- 2-Wire Start Compatible
- Power Output (kW)
- Power Factor
- kW Hours, Total & Last Run
- Real/Reactive/Apparent Power
- All Phase AC Voltage
- All Phase Currents
- Oil Pressure
- Coolant Temperature
- Coolant Level
- Engine Speed
- Battery Voltage
- Frequency
- Date/Time Fault History (Event Log)
- Isochronous Governor Control
- Waterproof/sealed Connectors
- Audible Alarms and Shutdowns
- Not in Auto (Flashing Light)
- Auto/Off/Manual Switch
- E-Stop (Red Mushroom-Type)
- Customizable Alarms, Warnings, and Events
- Modbus protocol
- Predictive Maintenance algorithm
- Sealed Boards
- Password parameter adjustment protection
- Single point ground
- 16 channel data logging
- 0.2 msec high speed data logging
- Alarm information automatically comes up on the display

Alarms

- Oil Pressure (Pre-programmable Low Pressure Shutdown)
- Coolant Temperature (Pre-programmed High Temp Shutdown)
- Coolant Level (Pre-programmed Low Level Shutdown)
- Low Fuel Alarm
- Engine Speed (Pre-programmed Over speed Shutdown)
- Battery Voltage Warning
- Alarms & warnings time and date stamped
- Alarms & warnings for transient and steady state conditions
- Snap shots of key operation parameters during alarms & warnings
- Alarms and warnings spelled out (no alarm codes)

PARALLELING CONTROLS

- Auto-synchronization process
- Isochronous load sharing
- Reverse power protection
- Maximum power protection
- Electrically operated, mechanically held paralleling switch
- Sync check system
- Independent on-board paralleling
- Optional programmable logic full auto back-up control (pls)
- Shunt Trip and Auxiliary Contact

SPEC SHEET

2 OF 6

MD600 | 18.1L | 600 kW

INDUSTRIAL DIESEL GENERATOR SET

EPA Certified Stationary Emergency

GENERAC | INDUSTRIAL POWER

CONFIGURABLE OPTIONS

ENGINE SYSTEM

General

- O 50° C Ambient Cooling System
- O Heavy Duty Air Cleaner
- O Critical & Hospital Grade Silencers
- O CCV (Closed Crankcase Ventilation)

Fuel Electrical System

- O 10A & 20A UL battery charger
- O Battery Warmer

ALTERNATOR SYSTEM

- O Alternator Upsizing
- O Anti-Condensation Heather

CIRCUIT BREAKER OPTIONS

- O Main Line Circuit Breaker
- O 2nd Main Line Circuit Breaker
- O Shunt Trip and Auxiliary Contact
- O Electronic Trip Breaker

GENERATOR SET

- O Insite monitor Communications Software (English Only)
- O 8 Load Position Load Center
- O AC Electrical Lighting Package (ELP)
- O 5 Year Warranty
- O 5 Year Extended Warranty
- O Spring Isolators (Standard/Seismic)

ENCLOSURE

- O Weather Protected Enclosure
- O Level 1 Sound Attenuation
- O Level 2 Sound Attenuation
- O Steel Enclosure
- O Aluminum Enclosure
- O 150/180 MPH Wind Rating
- O Louvers with Gravity Dampers
- O Enclosure Heaters

TANKS (Size on last page)

- O Electrical Fuel Level
- O Mechanical Fuel Level
- O 12 Hour Run Time
- O 24 Hour Run Time
- O Fuel Line Kits
- O Fuel Water Separator

CONTROL SYSTEM

- O NFPA 110 Compliant
- O Remote Relay Board (8 or 16)
- O Oil Temperature Sender with Indication Alarm
- O Remote E-Stop (Break Glass-Type, Surface Mount)
- O Remote E-Stop (Red Mushroom- Type, Surface Mount)
- O Remote E-Stop (Red Mushroom-Type, Flush Mount)
- O Remote Communication - Bridge
- X Remote Communication - Ethernet
- O 10A Run Relay, 12 outputs
- O Ground Fault Indication and Protection Functions

ENGINEERED OPTIONS

ENGINE SYSTEM

- O Fluid containment Pan
- O Oil Heater
- O Stainless Steel Hardware

ALTERNATOR SYSTEM

- O 3rd Breaker Systems
- O Unit Mounted Load Banks
- O Medium Voltage Alternators

CONTROL SYSTEM

- O Spare inputs (x4) / outputs (x4)
- O Battery Disconnect Switch

GENERATOR SET

- O Special Testing
- O 12 VDC Enclosure Lighting Kit
- O 24 VDC/120 VAC Enclosure Lighting Kit

ENCLOSURE

- O Motorized Dampers
- O Intrusion Alert Door Switch

TANKS

- O Overfill Protection Valve
- O UL2085 Tank
- O ULC S-601 Tank
- O Stainless Steel Tank
- O Special Fuel Tanks (MDEQ and FL DEP/DERM, etc.)
- O Vent Extensions
- O Transfer Pumps and Controllers
- O Fuel Tank Heaters

RATING DEFINITIONS

Standby - Applicable for a varying emergency load for the duration of a utility power outage with no overload capability.

Prime - Applicable for supplying power to a varying load in lieu of utility for an unlimited amount of running time. A 10% overload capacity is available for 1 out of every 12 hours. The Prime Power option is only available on International applications. Power ratings in accordance with ISO 8528-1, Second Edition

SPEC SHEET

3 OF 6

MD600 | 18.1L | 600 kW

INDUSTRIAL DIESEL GENERATOR SET

EPA Certified Stationary Emergency

GENERAC® | INDUSTRIAL POWER

APPLICATION AND ENGINEERING DATA

ENGINE SPECIFICATIONS

General

Make	Perkins
EPA Emissions Compliance	Stationary Emergency
EPA Emissions Reference	See Emissions Data Sheet
Cylinder #	6
Type	In-Line
Displacement - L (cu in)	18.13
Bore - mm (in)	145 (5.71)
Stroke - mm (in)	183 (7.20)
Compression Ratio	14.5:1
Intake Air Method	Turbocharged/Intercooled
Cylinder Head Type	4 - Valve
Piston Type	Aluminum
Crankshaft Type	I-Beam Section

Engine Governing

Governor	Electronic Isochronous
Frequency Regulation (Steady State)	+/- 0.25%

Lubrication System

Oil Pump Type	Gear
Oil Filter Type	Full-Flow Cartridge
Crankcase Capacity - L (qts)	45 (47.55)

Cooling System

Cooling System Type	Closed Recovery
Water Pump	Centrifugal Type, Belt Driven
Fan Type	Pusher
Fan Speed (rpm)	1439
Fan Diameter mm (in)	965 (38)
JW Coolant Heater Standard Wattage	
After Coolant Heater Standard Wattage	1500
Coolant Heater Standard Voltage	240VAC

Fuel System

Fuel Type	Ultra Low Sulfur Diesel #2
Fuel Specifications	ASTM
Fuel Filtering (microns)	Primary 10 - Secondary 2
Fuel Injection	Electronic
Fuel Pump Type	Engine Driven Gear
Injector Type	MEUI
Engine Type	Pr-Combustion
Fuel Supply Line mm (in)	12.7 (½"NPT)
Fuel Return Line mm (in)	12.7 (½"NPT)

Engine Electrical System

System Voltage	24 VDC
Battery Charging Alternator	70 Amps at 24V
Battery Size	1155 CCA
Battery Group	8D
Battery Voltage	(2) - 12 VDC
Ground Polarity	Negative

ALTERNATOR SPECIFICATIONS

Standard Model	WEG
Poles	4
Field Type	Revolving
Insulation Class - Rotor	H
Insulation Class - Stator	H
Total Harmonic Distortion	<3%
Telephone Interference Factor (TIF)	<50

Standard Excitation	Permanent Magnet
Bearings	Single Sealed Cartridge
Coupling	Direct, Flexible Disc
Load Capacity - Standby	100%
Prototype Short Circuit Test	Yes
Voltage Regulator Type	Digital
Regulation Accuracy (Steady State)	±0.5%

SPEC SHEET

4 OF 6

MD600 | 18.1L | 600 kW

INDUSTRIAL DIESEL GENERATOR SET

EPA Certified Stationary Emergency

GENERAC | INDUSTRIAL POWER

OPERATING DATA

POWER RATINGS

		Standby
Three-Phase 120/208 VAC @0.8pf	600 kW	Amps: 2081
Three-Phase 120/240 VAC @0.8pf	600 kW	Amps: 1804
Three-Phase 277/480 VAC @0.8pf	600 kW	Amps: 903
Three-Phase 346/600 VAC @0.8pf	600 kW	Amps: 723

STARTING CAPABILITIES (sKVA)

sKVA vs. Voltage Dip

		480 VAC						208/240 VAC					
Alternator	kW	10%	15%	20%	25%	30%	35%	10%	15%	20%	25%	30%	35%
Standard	600	743	1114	1486	1857	2229	2600	543	814	1086	1357	1629	1900
Upsize 1	832	757	1136	1514	1893	2271	2650	571	857	1143	1429	1714	2000

FUEL CONSUMPTION RATES*

Fuel Pump Lift - ft (m)
12 (3.7)

Total Fuel Pump Flow (Combustion + Return) gal/hr (l/hr)
121 (457)

Diesel - gal/hr (l/hr)

Percent Load	Standby
25%	18.4 (69.7)
50%	28.2 (88.7)
75%	35.6 (124.8)
100%	41.4 (156.7)

* Fuel supply installation must accommodate fuel consumption rates at 100% load.

COOLING

		Standby
Coolant Flow per Minute	gal/min (l/min)	114.1 (432)
Coolant System Capacity	gal (L)	13 (49)
Heat Rejection to Coolant	BTU/hr	1,599,750
Inlet Air	cfm (m^3/hr)	30088 (852)
Max. Operating Radiator Air Temp	F° (C°)	122 (50)
Max. Ambient Temperature (before derate)	F° (C°)	104 (40)
Maximum Radiator Backpressure	in H_2O	0.5

COMBUSTION AIR REQUIREMENTS

		Standby
Flow at Rated Power	cfm (m^3/min)	1836 (52)

ENGINE

		Standby
Rated Engine Speed	rpm	1800
Horsepower at Rated kW**	hp	909
Piston Speed	ft/min (m/min)	2161.4
BMEP	psi	361

** Refer to "Emissions Data Sheet" for maximum bHP for EPA and SCAQMD permitting purposes.

EXHAUST

		Standby
Exhaust Flow (Rated Output)	cfm (m^3/min)	4980 (141)
Max. Backpressure (Post Silencer)	inHg (Kpa)	2.13 (6.9)
Exhaust Temp (Rated Output)	°F (°C)	1029 (554)
Exhaust Outlet Size (Open Set)	mm (in)	203 (8)

SPEC SHEET

Operation – Operational characteristics consider maximum ambient conditions. Derate factors may apply under atypical site conditions.
Please consult a Generac Power Systems Industrial Dealer for additional details. All performance ratings in accordance with ISO3046, BS5514, ISO8528 and DIN6271 standards.

Doppelmayr®

MD600 | 18.1L | 600 kW

INDUSTRIAL DIESEL GENERATOR SET

EPA Certified Stationary Emergency

DIMENSIONS AND WEIGHTS*

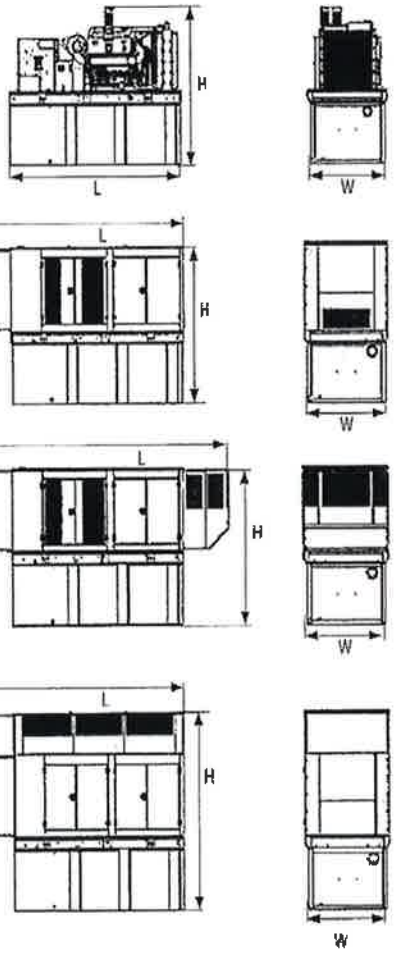

OPEN SET

RUN TIME HOURS	USABLE CAPACITY GAL (L)	L x W x H in (mm)	WT lbs (kg) - Tank & Open Set
NO TANK	-	154.4 (3923) x 71 (1803) x 67 (1702)	10375 (4706)
8	334	158.5 (4026) x 71 (1803) x 81 (2057)	12050 (4566)
24	1001	158.5 (4026) x 71 (1803) x 103 (2616)	12975 (5885)
24	1991	228 (5791) x 71 (1803) x 92 (2337)	13525 (6135)
48	2002	290 (7366) x 71 (1803) x 103 (2616)	15275 (6906)

STANDARD ENCLOSURE

RUN TIME HOURS	USABLE CAPACITY GAL (L)	L x W x H in (mm)	WT lbs (kg) - Enclosure Only Steel	WT lbs (kg) - Enclosure Only Aluminum
NO TANK	-	207.4 (5268) x 71 (1803) x 80 (2032)	1999 (907)	869 (394)
8	334	207.4 (5268) x 71 (1803) x 94 (2388)		
24	1001	207.4 (5268) x 71 (1803) x 116 (2946)		
24	1001	228 (5791) x 71 (1803) x 105 (2667)		
48	2002	290 (7366) x 71 (1803) x 116 (2946)		

LEVEL 1 ACOUSTIC ENCLOSURE

RUN TIME HOURS	USABLE CAPACITY GAL (L)	L x W x H in (mm)	WT lbs (kg) - Enclosure Only Steel	WT lbs (kg) - Enclosure Only Aluminum
NO TANK	-	247.5 (6285) x 71 (1803) x 80 (2032)	2782 (1262)	1291 (586)
8	334	247.5 (6285) x 71 (1803) x 94 (2388)		
24	1001	247.5 (6285) x 71 (1803) x 116 (2946)		
24	1001	247.5 (6285) x 71 (1803) x 105 (2667)		
48	2002	290 (7366) x 71 (1803) x 116 (2946)		

LEVEL 2 ACOUSTIC ENCLOSURE

RUN TIME HOURS	USABLE CAPACITY GAL (L)	L x W x H in (mm)	WT lbs (kg) - Enclosure Only Steel	WT lbs (kg) - Enclosure Only Aluminum
NO TANK	-	207.4 (5268) x 71 (1803) x 114 (2899)	3320 (1510)	1522 (692)
8	334	207.4 (5268) x 71 (1803) x 128 (3251)		
24	1001	207.4 (5268) x 71 (1803) x 150 (3810)		
24	1001	228 (5791) x 71 (1803) x 139 (3531)		
48	2002	290 (7366) x 71 (1803) x 150 (3810)		

* All measurements are approximate and for estimation purposes only. Sound dBA can be found on the sound data sheet. Enclosure Only weight is added to Tank & Open Set weight to determine total weight.

SPEC SHEET

Specification characteristics may change without notice. Dimensions and weights are for preliminary purposes only. Please contact a Generac Power Systems Industrial Dealer for detailed installation drawings.

 © 2015 Generac Power Systems, Inc. All rights reserved. All specifications are subject to change without notice

BI-FUEL GENERATOR MANUFACTURER SUBMITTAL

Quantity two (2)

- Generac Industrial Bi-Fuel (natural gas/diesel) engine-driven generator set with turbocharged/aftercooled 6-cylinder 18.1L engine, consisting of the following features and accessories:

- **600 kW Rating, wired for 277/480 VAC three phase, 60 Hz**
- **MPS - Parallel Unit**
- **Stationary Emergency-Standby rated**
- **Permanent Magnet Excitation**
- SCAQMD
- UL2200
- EPA Certified
- Power Manager Digital Control Platform configured for Generac Modular Power System's Paralleling Controller (PM-PC)
    - 32 bit microprocessor structured with: real-time clock, 47 inputs, 32 outputs, 2 - RS232 ports, 2 - RS485 ports, RJ45 modem port, CANbus port
    - +/-1.0% digital voltage regulator with: 3 phase RMS sensing, soft-start voltage ramping - adjustable, loss of sensing protection - adjustable, negative power limit - adjustable, Hi/Lo voltage limit - adjustable, V/F slope and gain - adjustable, fault protection, encapsulated and sealed
    - 0.25% digital frequency regulation with: soft-start ramping - adjustable, gain - adjustable, overshoot limit - adjustable
    - On-board PLC for customer configuration with: 24 digital inputs, 43 analog inputs, 24 digital open-collector outputs - 30 vdc, 16 timers, 16 counters
    - Programmable touch screen engine control and monitoring module with: Auto/Manual/Off key switch, Alarm LED, Not in Auto LED, audible alarm, emergency stop switch, 30-page readout including: Oil Pressure and optional Oil Temp, Coolant Temp and Level, Fuel Level (where applicable), Engine Speed, DC Battery Voltage, Run-time Hours, Generator Voltages, Amps, Frequency, Power, Power Factor, Alarm Status: Low or High AC Voltage, Low or High Battery Voltage, Low or High Frequency, Pre-low or Low Oil Pressure, Pre-high or High Oil Temp (optional), Low Water Level and Temp, Pre-high or High Engine Temp, High, Low, and Critical-low Fuel Level (where applicable), Overcrank, Over and Under Speed, Unit Not in Automatic
- Bi-Fuel
- Level 2 Acoustic Enclosure, Steel

- Motorized Dampers
- Industrial grey Baked-On Powder Coat Finish

- Battery Heating Pad
- 225 AH, 1155 CCA Group 8D Batteries, with rack, installed
- Coolant Heater, 2500W, 240VAC
- Standard 2-Year Limited warranty
- AC/DC Light Kit
- MLCB, 80% rated thermal-magnetic
  - 1000
- 36" 1001 Gallon Double-Wall UL142 Basetank
  - Mechanical fuel level indicator gauge
  - Electronic fuel level sender
- Std set of 3 Manuals
- 12 Position Load Center, unit mounted
- 120V GFCI and 240V Outlet
- Battery Charger, 10 Amp, NFPA 110 compliant, installed
- MB0600KG22181B18GPLY2
- **Froight**
- **Start-up**
- **4 hour load banking**

SB/MB600 | 18.1L | 600 kW

INDUSTRIAL BI-FUEL GENERATOR SET

EPA Certified Stationary Emergency

GENERAC | INDUSTRIAL POWER

STANDBY POWER RATING
600 kW, 750 kVA, 60 Hz

PRIME POWER RATING*
540 kW, 675 kVA, 60 Hz

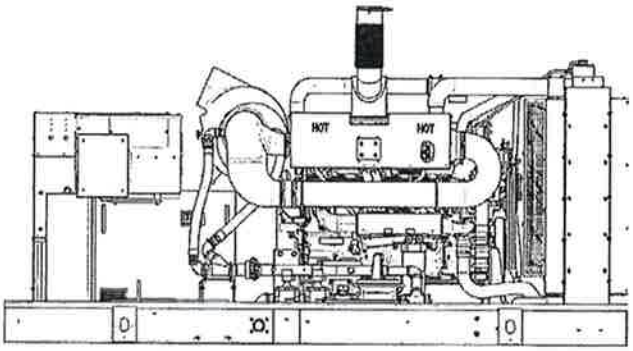

*Built in the USA using domestic and foreign parts

* EPA Certified Prime ratings are not available in the U.S. or its Territories.

** Certain options or configuration may not hold certification valid.

Image used for illustration purposes only

Features

- **INNOVATIVE DESIGN & PROTOTYPE TESTING** are key components of GENERAC'S success in "IMPROVING POWER BY DESIGN." But it doesn't stop there. Total commitment to component testing, reliability testing, environmental testing, destruction and life testing, plus testing to applicable CSA, NEMA, EGSA, and other standards, allows you to choose GENERAC POWER SYSTEMS with the confidence that these systems will provide superior performance.
- **TEST CRITERIA:**
  - ✓ PROTOTYPE TESTED
  - ✓ SYSTEM TORSIONAL TESTED
  - ✓ ELECTRO-MAGNETIC INTERFERENCE
  - ✓ NEMA MG1 EVALUATION
  - ✓ MOTOR STARTING ABILITY
  - ✓ SHORT CIRCUIT TESTING
  - ✓ UL 2200 COMPLIANCE AVAILABLE
- **POWERMANAGER® DIGITAL CONTROL PLATFORM.** The PowerManager® Digital Control Platform (PM-DCP) is a powerful control system built around a 32-bit, industrial microprocessor. Standard factory programming controls the entire engine / generator system, while allowing the PM-DCP with its onboard PLC, to be customized to meet any application requirement. The system is available on bi-fuel installations as well as Modular Paralleling Systems (MPS).
- **BI-FUEL** provides low cost, low volume fuel storage and operation along with a significant reduction in fuel costs.
- **SINGLE SOURCE SERVICE RESPONSE** from Generac's dealer network provides parts and service know-how for the entire unit, from the engine to the smallest electronic component. You are never on your own when you own a GENERAC POWER SYSTEM.
- **ECONOMICAL POWER.** Microprocessor controlled bi-fuel diesel engine starts on diesel fuel and provides power from an air/natural gas mixture ignited by diesel injection and continuously monitored by the on board control.
- **LONGER ENGINE LIFE.** Generac heavy-duty diesels provide long and reliable operating life.
- **GENERAC TRANSFER SWITCHES, SWITCHGEAR AND ACCESSORIES.** Long life and reliability is synonymous with GENERAC POWER SYSTEMS. One reason for this confidence is that the GENERAC product line includes its own transfer systems, accessories, switchgear and controls for total system compatibility.

Primary Codes and Standards

NEMA ANSI American National Standards Institute

SPEC SHEET

SB/MB600 | 18.1L | 600 kW

INDUSTRIAL BI-FUEL GENERATOR SET

EPA Certified Stationary Emergency

GENERAC | INDUSTRIAL POWER

STANDARD FEATURES

ENGINE SYSTEM

General

- Oil Drain Extension
- Air Cleaner
- Fan Guard
- Stainless Steel flexible exhaust connection
- Critical Exhaust Silencer
- Factory Filled Oil
- Engine Block Heater

Fuel System

- Primary and Secondary Fuel Shutoff
- Primary and Secondary Fuel Filters

Cooling System

- Closed Coolant Recovery System
- UV/Ozone resistant hoses
- Factory-Installed Radiator
- 50/50 Ethylene glycol antifreeze

Engine Electrical System

- Battery charging alternator
- Battery cables
- Battery tray
- Solenoid activated starter motor
- Rubber-booted engine electrical connections

ALTERNATOR SYSTEM

- Class H insulation material
- 2/3 Pitch
- Skewed Stator
- Permanent Magnet Excitation
- Sealed Bearings
- Amortisseur winding
- Full load capacity alternator

GENERATOR SET

- Internal Genset Vibration Isolation
- Separation of circuits—high/low voltage
- Separation of circuits—multiple breakers
- Wrapped Exhaust Piping (enclosed only)
- Standard Factory Testing
- 2 Year Limited Warranty (Standby rated Units)
- Silencer mounted in the discharge hood (enclosed only)

ENCLOSURE (IF SELECTED)

- Rust-proof fasteners with nylon washers to protect finish
- High performance sound-absorbing material (L1 & L2)
- Gasketed doors
- Stamped air-intake louvers
- Upward pointing radiator discharge hood
- Stainless steel lift off door hinges
- Stainless steel lockable handles
- Rhino Coat™ - Textured polyester powder coat

TANKS (IF SELECTED)

- UL 142
- ULC S-601 Tank
- Double wall
- Vents
- Sloped top
- Sloped bottom
- Factory Pressure Tested (2 psi)
- Rupture basin alarm
- Electric Fuel Level
- Check valve in supply and return lines
- Rhino Coat™ - Textured polyester powder coat tank
- Stainless Steel Hardware

CONTROL SYSTEM

Control Panel

- Digital G-200 Paralleling Control Panel - Touchscreen
- Programmable Crank Limiter
- 7-Day Programmable Exercise
- Special Applications Programmable PLC
- RS-232/485
- All-Phase Sensing DVR
- Full System Status
- Utility Monitoring
- Low Fuel Pressure Indication
- 2-Wire Start Compatible
- Power Output (kW)
- Power Factor
- kW Hours, Total & Last Run
- Real/Reactive/Apparent Power
- All Phase AC Voltage
- All Phase Currents
- Oil Pressure
- Coolant Temperature
- Coolant Level
- Engine Speed
- Battery Voltage
- Frequency
- Date/Time Fault History (Event Log)
- Isochronous Governor Control
- Waterproof/sealed Connectors
- Audible Alarms and Shutdowns
- Not in Auto (Flashing Light)
- Auto/Off/Manual Switch
- E-Stop (Red Mushroom-Type)
- Customizable Alarms, Warnings, and Events
- Modbus protocol
- Preactive Maintenance algorithm
- Sealed Boards
- Password parameter adjustment protection
- Single point ground
- 15 channel data logging
- 0.2 msec high speed data logging
- Alarm information automatically comes up on the display

Alarms

- Oil Pressure (Pre-programmable Low Pressure Shutdown)
- Coolant Temperature (Pre-programmed High Temp Shutdown)
- Coolant Level (Pre-programmed Low Level Shutdown)
- Low Fuel Pressure Alarm
- Engine Speed (Pre-programmed Over speed Shutdown)
- Battery Voltage Warning
- Alarms & warnings time and date stamped
- Alarms & warnings for transient and steady state conditions
- Snap shots of key operation parameters during alarms & warnings
- Alarms and warnings spelled out (no alarm codes)

PARALLELING CONTROLS (MB600)

- Auto synchronization process
- Isochronous load sharing
- Reverse power protection
- Maximum power protection
- Electrically operated, mechanically held paralleling switch
- Sync check system
- Independent on-board paralleling
- Optional programmable logic full auto back-up control (p/s)
- Shunt Trip and Auxiliary Contact

SPEC SHEET

2 of 6

SB/MB600 | 18.1L | 600 kW

INDUSTRIAL BI-FUEL GENERATOR SET

EPA Certified Stationary Emergency

GENERAC | INDUSTRIAL POWER

CONFIGURABLE OPTIONS

ENGINE SYSTEM

General

- O Air Filter Restriction Indicator
- O Stone Guard (Open Set Only)
- O Flexible Fuel Line - NPT Connection

Engine Electrical System

- O 10A battery charger

ALTERNATOR SYSTEM

- O Alternator Upsizing
- O Anti-Condensation Heater

CIRCUIT BREAKER OPTIONS

- O Main Line Circuit Breaker
- O 2nd Main Line Circuit Breaker (SB600 Only)
- O Shunt Trip and Auxiliary Contact (SB600 Only)
- O Electronic Trip Breakers

GENERATOR SET

- O Gen-Link Communications Software (English Only)
- O Extended Factory Testing
- O IBC Seismic Certification

ENCLOSURE

- O Standard Enclosure
- O Level 1 Sound Attenuation
- O Level 2 Sound Attenuation
- O Steel Enclosure
- O Aluminum Enclosure
- O 180 MPH Wind Certification
- O 12 VDC Enclosure Lighting Kits
- O 120 VAC Enclosure Lighting Kits
- O Combined AC/DC Lighting Kits

TANKS (Size on last page)

- O Electrical Fuel Level
- O Mechanical Fuel Level
- O 334 Gal (1264 L) Usable Capacity
- O 1001 Gal (3789 L) Usable Capacity
- O 2002 Gal (7578 L) Usable Capacity
- O 8" Fill Extension
- O 13" Fill Extension
- O 19" Fill Extension

CONTROL SYSTEM

- O 21-Light Remote Annunciator
- O Remote Relay Board (8 or 16)
- O Oil Temperature Sender with Indication Alarm
- O Remote E-Stop (Break Glass-Type, Surface Mount)
- O Remote E-Stop (Red Mushroom-Type, Surface Mount)
- O Remote E-Stop (Red Mushroom-Type, Flush Mount)
- O Remote Communication - Modem
- O 10A Fuel Relay
- O Ground Fault Indication and Protection Functions
- O PLS Full Auto Back-Up for PM-SC

ENGINEERED OPTIONS

ENGINE SYSTEM

- O Fluid containment Pans

ALTERNATOR SYSTEM

- O 2nd Breaker Systems (SB600 Only)
- O 3rd Breaker Systems (SB600 Only)

CONTROL SYSTEM

- O Battery Disconnect Switch

GENERATOR SET

- O Special Testing
- O Battery Box

ENCLOSURE

- O Motorized Dampers
- O Door Alarm Switch

TANKS

- O Overfill Protection Valve
- O UL2085 Tank
- O Stainless Steel Tank
- O Special Fuel Tanks (MIDEQ and FL DEP/DERM, etc.)
- O Vent Extensions

RATING DEFINITIONS

Standby - Applicable for a varying emergency load for the duration of a utility power outage with no overload capability.

Prime - Applicable for supplying power to a varying load in lieu of utility for an unlimited amount of running time. A 10% overload capacity is available for 1 out of every 12 hours. The Prime Power option is only available on international applications. Power ratings in accordance with ISO 8528-1, Second Edition

Power ratings in accordance with ISO 8528-1, Second Edition dated 2005-06-01, definitions for Prime Power (PRP) and Emergency Standby Power (ESP)

SPEC SHEET

SB/MB600 | 18.1L | 600 kW

INDUSTRIAL BI-FUEL GENERATOR SET

EPA Certified Stationary Emergency

GENERAC | INDUSTRIAL POWER

APPLICATION AND ENGINEERING DATA

ENGINE SPECIFICATIONS

General

Make	Perkins
EPA Emissions Compliance	Stationary Emergency
EPA Emissions Reference	See Emissions Data Sheet
Cylinder #	6
Type	In-Line
Displacement - L	18.13
Bore - mm (in)	145 (5.71)
Stroke - mm (in)	183 (7.20)
Compression Ratio	14.5:1
Intake Air Method	Turbocharged/Aftercooled
Cylinder Head Type	4 Valve
Piston Type	Aluminum
Connecting Rod Type	I-Beam Section

Engine Governing

Governor	Electronic Isochronous
Frequency Regulation (Steady State)	+/- 0.25%

Lubrication System

Oil Pump Type	Gear
Oil Filter Type	Full Flow Cartridge
Crankcase Capacity - L (qts)	45 (47.55)

Cooling System

Cooling System Type	Closed Recovery
Water Pump	Centrifugal Type, Belt-Driven
Fan Type	Pusher
Fan Speed (rpm)	1439
Fan Diameter mm (in)	965 (38)
Coolant Heater Standard Wattage	1500
Coolant Heater Standard Voltage	120 VAC

Fuel System

Fuel Type	Ultra Low Sulfur Diesel #2
Fuel Specifications	ASTM
Fuel Filtering (microns)	Primary 10 - Secondary 2
Fuel Injection	Electronic
Fuel Pump Type	Engine Driven Gear
Injector Type	MEUI
Engine Type	Pre-Combustion
Fuel Supply Line mm (in)	12.7 (0.5) NPT
Fuel Return Line mm (in)	12.7 (0.5) NPT

Engine Electrical System

System Voltage	24 VDC
Battery Charging Alternator	70 Amps at 24V
Battery Size	See Battery Index 0161970SBY
Battery Group	8D
Battery Voltage	(2) - 12 VDC
Ground Polarity	Negative

HOW DOES A BI-FUEL ENGINE WORK?

The diesel engine is equipped with a metering system that feeds natural gas into the incoming air supply. The standard diesel injection system is used and the injector sprays diesel fuel into the cylinder at the correct time. The diesel fuel ignites and thus ignites the natural gas charge. Total power is derived from a combination of natural gas and diesel. The ratio of natural gas to diesel fuel is a function of several factors, including load and intake air temperature. The higher thermal efficiency of diesel engines and the lower cost of natural gas, along with low emission levels, combine to make the bi-fuel engine a very economical choice.

ALTERNATOR SPECIFICATIONS

Standard Model	WEG
Poles	4
Field Type	Revolving
Insulation Class - Rotor	H
Insulation Class - Stator	H
Total Harmonic Distortion	<3%
Telephone Interference Factor (TIF)	<50
Standard Excitation	Permanent Magnet
Bearings	Single Sealed Cartridge
Coupling	Direct, Flexible Disc
Load Capacity - Standby	100%
Prototype Short Circuit Test	Yes
Voltage Regulator Type	Digital
Regulation Accuracy (Steady State)	±1.0%

SPEC SHEET

4 OF 6

SB/MB600 | 18.1L | 600 kW

INDUSTRIAL DIESEL GENERATOR SET

EPA Certified Stationary Emergency

GENERAC | INDUSTRIAL POWER

OPERATING DATA

POWER RATINGS (kW)

	Standby	
Three-Phase 120/208 VAC @0.8pf	600 kW	Amps: 2081
Three-Phase 120/240 VAC @0.8pf	600 kW	Amps: 1804
Three-Phase 277/480 VAC @0.8pf	600 kW	Amps: 903
Three-Phase 346/600 VAC @0.8pf	600 kW	Amps: 723

STARTING CAPABILITIES (sKVA)

sKVA vs. Voltage Dip

480 VAC							
Alternator	kW	10%	15%	20%	25%	30%	35%
Standard	600	743	1114	1486	1857	2229	2600
Upsize 1	832	757	1136	1514	1893	2271	2650

208/240 VAC							
Alternator	kW	10%	15%	20%	25%	30%	35%
Standard	600	543	814	1086	1357	1629	1900
Upsize 1	723	571	857	1143	1428	1714	2000

FUEL CONSUMPTION RATES*

Fuel Pump Lift - ft (m)
12 (3.7)

Total Fuel Pump Flow (Combustion + Return)
121 gal/hr

Percent Load	Diesel Only gal/hr (l/hr) **
25%	18.4 (69.7)
50%	26.2 (99.2)
75%	35.0 (124.6)
100%	41.4 (156.7)

* Fuel supply must accommodate fuel consumption rates at 100% load.

** Natural Gas substitution may vary based on the application and load conditions. Please consult factory for additional details on fuel consumption.

COOLING

		Standby
Coolant Flow per Minute	gal/min (l/min)	114.1 (432)
Heat Rejection to Coolant	BTU/hr	1,589,700
Inlet Air	cfm (m^3/min)	30,088 (852)
Max. Operating Radiator Air Temp	°F (°C)	122 (50)
Coolant System Capacity	gal (L)	13 (49)
Maximum Additional Radiator Backpressure	in H_2O	0.5

COMBUSTION AIR REQUIREMENTS

		Standby
Flow at Rated Power	cfm (m^3/min)	1836 (52)

ENGINE

		Standby
Rated Engine Speed	rpm	1800
Horsepower at Rated kW**	hp	909
Piston Speed	ft/min	2161.4
BMEP	psi	361

** Refer to "Emissions Data Sheet" for nameplate bhp for EPA and SCAQMD permitting purposes

EXHAUST

		Standby
Exhaust Flow (Rated Output)	cfm (m^3/min)	5085 (144)
Max. Backpressure (Post Turbo)	inHg (Kpa)	2.13 (6.9)
Exhaust Temp (Rated Output - post silencer)	°F (°C)	1155 (624)
Exhaust Outlet Size (Open Set)	mm (in)	Dual 152 (6)

Derate – Operational characteristics consider maximum ambient conditions. Derate factors may apply under atypical site conditions. Please consult a Generac Power Systems Industrial Dealer for additional details. All performance ratings in accordance with ISO3046, BS5514, ISO8528 and DIN6271 standards.

SPEC SHEET

1 OF 6

Doppelmayr®

GENERAC | INDUSTRIAL POWER

SB/MB600 | 18.1L | 600 kW

INDUSTRIAL DIESEL GENERATOR SET

EPA Certified Stationary Emergency

DIMENSIONS AND WEIGHTS*

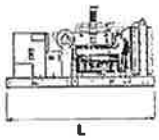

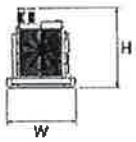

OPEN SET

RUN TIME HOURS**	USABLE CAPACITY GAL (L)	L x W x H in (mm)	Wt lbs (kg) - Tank & Open Set
NO TANK	-	154.4 (3923) x 71 (1803) x 67 (1702)	10,710 (4860)
8	334 (1264.3)	158.5 (4026) x 71 (1803) x 81 (2057)	12,385 (5620)
24	1001 (3789.2)	158.5 (4026) x 71 (1803) x 103 (2616)	13,310 (6037)
24	1001 (3790)	228 (5791) x 71 (1803) x 92 (2337)	13,960 (6297)
48	2002 (7578.4)	290 (7366) x 71 (1803) x 103 (2616)	15,560 (7058)

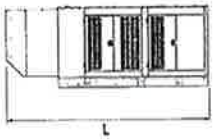

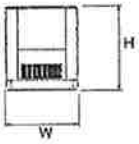

STANDARD ENCLOSURE

RUN TIME HOURS**	USABLE CAPACITY GAL (L)	L x W x H in (mm)	Wt lbs (kg) - Enclosure Only: Steel	Wt lbs (kg) - Enclosure Only: Aluminum
NO TANK	-	207.4 (5268) x 71 (1803) x 80 (2032)	1999 (907)	869 (394)
8	334 (1264.3)	207.4 (5268) x 71 (1803) x 94 (2388)		
24	1001 (3789.2)	207.4 (5268) x 71 (1803) x 116 (2946)		
24	1001 (3790)	226 (5791) x 71 (1803) x 105 (2667)		
48	2002 (7578.4)	290 (7366) x 71 (1803) x 116 (2946)		

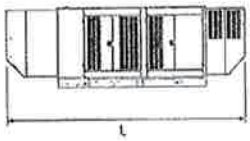

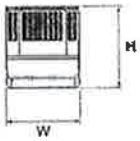

LEVEL 1 ACOUSTIC ENCLOSURE

RUN TIME HOURS**	USABLE CAPACITY GAL (L)	L x W x H in (mm)	Wt lbs (kg) - Enclosure Only: Steel	Wt lbs (kg) - Enclosure Only: Aluminum
NO TANK	-	247.5 (6285) x 71 (1803) x 80 (2032)	2782 (1262)	1291 (586)
8	334 (1264.3)	247.5 (6285) x 71 (1803) x 94 (2388)		
24	1001 (3789.2)	247.5 (6285) x 71 (1803) x 116 (2946)		
24	1001 (3790)	247.5 (6285) x 71 (1803) x 105 (2667)		
48	2002 (7578.4)	290 (7366) x 71 (1803) x 116 (2946)		

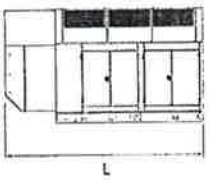

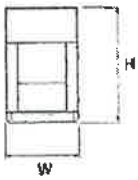

LEVEL 2 ACOUSTIC ENCLOSURE

RUN TIME HOURS**	USABLE CAPACITY GAL (L)	L x W x H in (mm)	Wt lbs (kg) - Enclosure Only: Steel	Wt lbs (kg) - Enclosure Only: Aluminum
NO TANK	-	207.4 (5268) x 71 (1803) x 114 (2896)	3330 (1510)	1522 (692)
8	334 (1264.3)	207.4 (5268) x 71 (1803) x 128 (3251)		
24	1001 (3789.2)	207.4 (5268) x 71 (1803) x 143 (3630)		
24	1001 (3790)	226 (5791) x 71 (1803) x 139 (3531)		
48	2002 (7578.4)	290 (7366) x 71 (1803) x 150 (3810)		

*All measurements are approximate and for estimation purposes only. Sound dBA can be found on the sound sheet. Enclosure Only weight is added to Tank & Open Set weight to determine total weight.
**Diesel only. Bi-Fuel mode will exceed run time hours.

YOUR FACTORY RECOGNIZED GENERAC INDUSTRIAL DEALER

SPEC SHEET

6 OF 6

Specification characteristics may change without notice. Dimensions and weights are for preliminary purposes only. Please contact a Generac Power Systems Industrial Dealer for detailed installation drawings.

 © 2015 Generac Power Systems, Inc. All rights reserved. All specifications are subject to change without notice.

R & A

R&A ENTERPRISES
OF MONTROSE, INC.
3045 Aerotech Parkway, Unit 3
Montrose, CO 81401
970-379-5173 (F) 970-945-0500

August 19, 2016

Jim Loebe
Transit Director- Director of Parks and Recreation
Town of Mountain Village
Re: Gondola Standby Power Generation

Electrical Proposal I

We are pleased to submit a proposal for Electrical Construction based off of our site visit and the Gondola Standby Power Generation Q&A we received.

Included:

1) Provide, install and set up (1) NG or Diesel 2000amp Cummins Gen Set this would back up the Gondola and the Gondola 200 amp building panel.
2) Provide, install and set up (1) NG or Diesel 800amp Cummins Gen Set for the restaurant back up.
3) Engineering by Mark Burggraaf is included.
4) Delivery to the site and offloading.
5) 4 hour on site resistive load bank test.
6) All required submittals.
7) One-year warranty (from date of final inspection) on electrical installation minus lamps.

Excluded:

1) Any concrete work, pads, coring, or patching.
2) Trash removal to on site container only.
3) Bid or Performance bond.
4) Taxes.
5) Overtime, based on 40 hour per week schedule.
6) Excavation, compaction or backfill.
7) No cutting or trimming of drywall or insulation and finished surfaces including logs and beams.
8) Piping of NG or Diesel fuels.

R&A ENTERPRISES OF MONTROSE, INC.
3045 Aerotech Parkway, Unit 3
Montrose, CO 81401
970-379-5173 (F) 970-945-0500

9) Fuel either type.
10) Building structures by others.
11) Any exhausting of generator if there is a building built around the generator.
12) Any material/equipment delivery after any snow is on the mountain.
13) Permits.
14) Snow removal

Clarifications:

800amp Option #1

Restaurant
800 amp Diesel Gen Set and MTS

Generator Electrical Install	**$153,430.00**
Generator	**$131,377.00**
5% Contingency	**$14,241.00**
Total	**$299,048.00**

800amp Option #2

Restaurant
800 amp Natural Gas Gen Set and MTS

Generator Electrical Install	**$153,430.00**
Generator	**$305,617.00**
5% Contingency	**$22,952.00**
Total	**$481,999.00**

2000amp Option #1

Gondola
2000 amp Diesel Gen Set and MTS

Generator Electrical Install	**$200,635.00**
Generator	**$528,500.00**
5% Contingency	**$37,639.00**
Total	**$766,774.00**

Adder to run wire in EMT through building	**$38,522.00**

2000amp Option #2

R&A ENTERPRISES
OF MONTROSE, INC.
3045 Aerotech Parkway, Unit 3
Montrose, CO 81401
970-379-5173 (F) 970-945-0500

Gondola
2000 amp NG Gen Set and MTS

Generator Electrical Install	**$260,858.00**
Generator	**$1,104,235.00**
5% Contingency	**$68,255.00**
Total	**$1,433,348.00**

Adder to run wire in EMT through building	**$46,996.00**

Time and Material Rates

Journeymen	$75.00
Apprentice	$55.00
Materials	Cost plus 10%

We appreciate the opportunity to price this project for you. Please call if you have **any** questions.

Thank you,

Dwight Isley
R&A Enterprises

WIPS

WIPS

Proposal

Town of Mountain Village

Stand by power for Gondola and Restaurant

Submitted by

David Wilson

WIPS LLC

Farmington, NM

August 19, 2016

The following proposal has 7 options all with different configurations and prices. They are as follows:

1. One large Natural Gas generator operating the gondola and supporting facility alone. 1000KW site rating 810KW 1000KVA
2. One large Natural Gas generator operating the gondola and restaurant. 1000KW site rating 810KW 1000KVA
3. Two 500KW natural gas generators site rating 405KW for total system rating 810KW 1000KVA Operating the gondola and support facility alone.
4. Two Dual Fuel (diesel/ Natural Gas) generators. 500KW 625KVA. Site rating 1000KW 1250KVA. Operating the gondola and support facility alone.
5. Two Dual Fuel (Diesel/ Natural Gas) generators. 500KW 625KVA. Site rating 1000KW 1250KVA operating the gondola and restaurant.
6. Three Dual Fuel (Diesel/ Natural Gas) 500KW 625KVA. System site rating 1.5MW 1875KVA.
7. Three Natural Gas generators 500KW. Site rating 405KW 500KVA. System site rating 1210KW 1500KVA operating the gondola and restaurant.

GONDOLA + RESTARAUNT

All generators quoted will be sound attenuated. Dual fuel diesel/ NG generators will have sub base tanks with capacity for 24Hrs at full load. Dual fuel generators will operate at a rate of 70% NG and 30% diesel under normal operations. In the event of loss of natural gas, the diesel will assume load seamlessly.

All generators will be equipped with block heaters, battery chargers and necessary support equipment.

Attached are specification sheets for the Kohler 1000REZK, the Kohler 500REZK and the SWP QP625.

Upon awarding of bid, equipment will be ordered and final engineering and studies will be completed.

A down payment of 40% will be required upon placement of equipment order.

The SWP Dual fuel generators are currently in stock. The Kohler generators and all electrical gear have a 12 -14 week lead time. Construction can begin immediately after drawings are approved. Generators can be set in place while awaiting delivery of remaining equipment.

All equipment will be controlled at a master control manually by an operator.

WIPS LLC has been in business since 2008. We are certified sales and service dealers for KOHLER Power Systems, WINCO, WINCOGEN and SWP power products. We are members of ISNetworld and comply with all insurance and regulatory standards in our industry. We are fully equipped with the latest in tooling, training and equipment to handle any and all power systems needs. We have over 50 years combined experience in the power generation industry.

Thank you for the opportunity to bid this project.

David Wilson
WIPS LLC
Owner/ Manager
505 419 1119
david@wipsonline.com
www.wipsonline.com

Installing contractor:

M&J Troubleshooting
Myron Jaquez
505-320-2106

Engineer:
Antonio Garcia
505-215-9293

Option 1

- 1000REZK Kohler Natural Gas generator. Site rating 810KW 1000KVA
- 2000A 480V NEMA 3R Closed transition switch with manual controls
- 2000A 480V NEMA 3R distribution panel
- 1250KW Automatic load bank (regenerative load)
- 15KVA 480/240 transformer (Support facility)
- 240V 200A NEMA 1 ATS with manual controls (Support facility)
- Master control panel
- Engineering/ Install less excavation and concreate/ commissioning

480 → 240/120

System Total 1,119,950.00

Option 2

Same as above with additional

- 500KVA Transformer NEMA 1
- 2000A 208V ATS NEMA 1
- Added section to Distribution panel
- Added install/ engineering

System Total 1,289,510.00

Option 3

- Two KOHLER 500REZK Natural Gas generators. Site rating 405KW 500KVA. System rating 810KW 1000KVA
- 2 generator paralleling gear w/ATS manual control
- 2000A 480V NEMA 3R distribution panel
- 1250KW auto load bank (regenerative load)
- ? 15KVA 480/240 transformer (Support facility)
- 240v 200A ATS with manual control
- Master control panel
- Engineering/ Install less excavation and concreate/ commissioning

System Total 1,594,860.00

Option 4

Same as above with exception

- Two SWP QP625 500KW 625KVA generators. System site rating 1000KW 1250KVA. Dual Fuel Diesel/ Natural gas.

System total 988,148.00

Option 5

Same as option 4 with additional

- 500KVA Transformer NEMA 1
- 2000A 208V ATS NEMA 1
- Added section to Distribution panel
- Added install/ engineering

System Total 1,157,708

Option 6

Same as option 5 with additional

- Additional SWP QP625 dual fuel generator
- Additional generator section to paralleling gear

System Total 1,545,501.00

Option 7

Same as option 3 with additional

- Additional Kohler 500REZK Natural gas generator
- Additional generator section to paralleling gear
- 500KVA Transformer NEMA 1
- 2000A 208V ATS NEMA 1
- Added section to Distribution panel
- Added install/ engineering

System Total 2,513,670.00

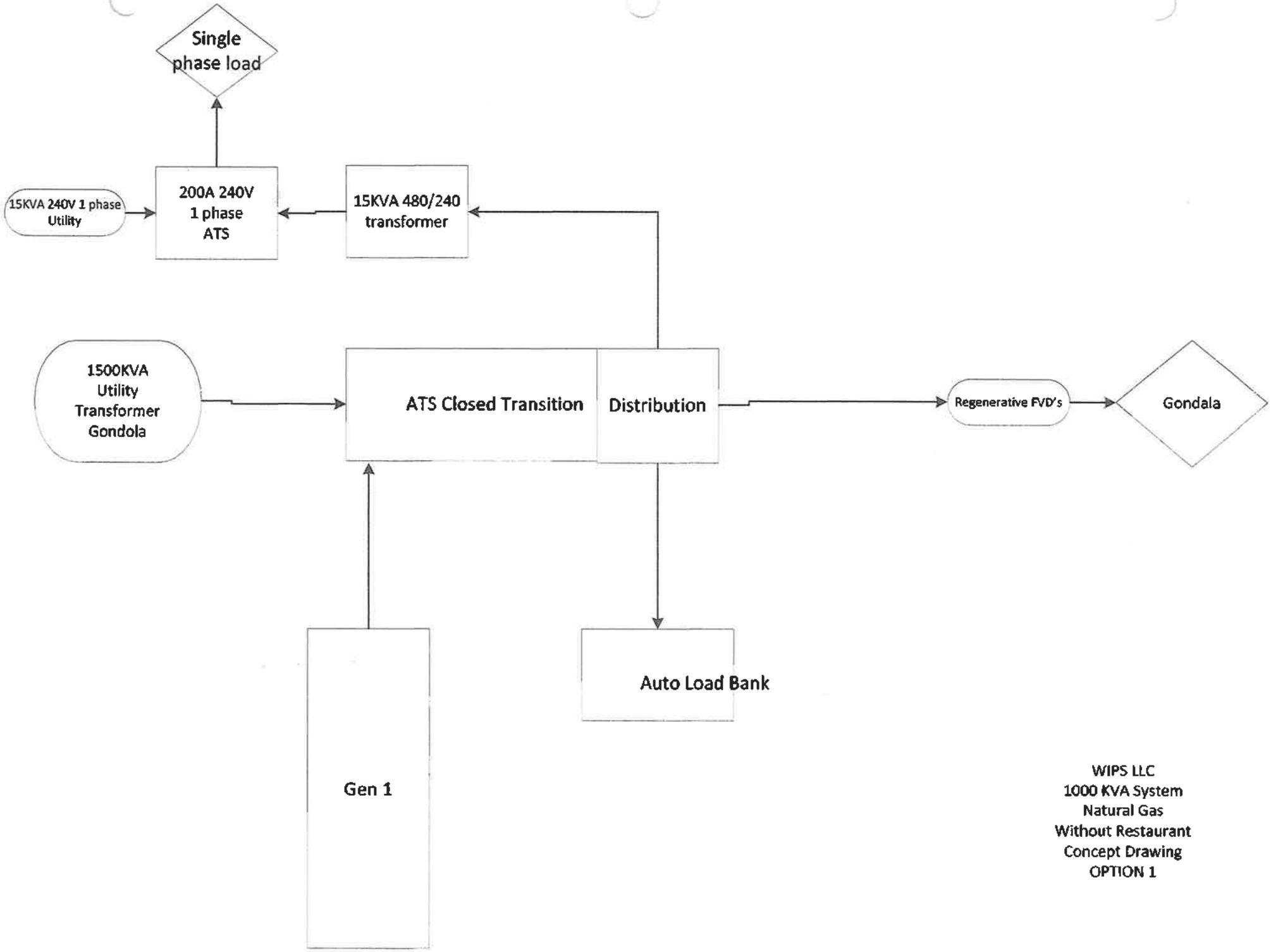

WIPS LLC
1000 KVA System
Natural Gas
Without Restaurant
Concept Drawing
OPTION 1

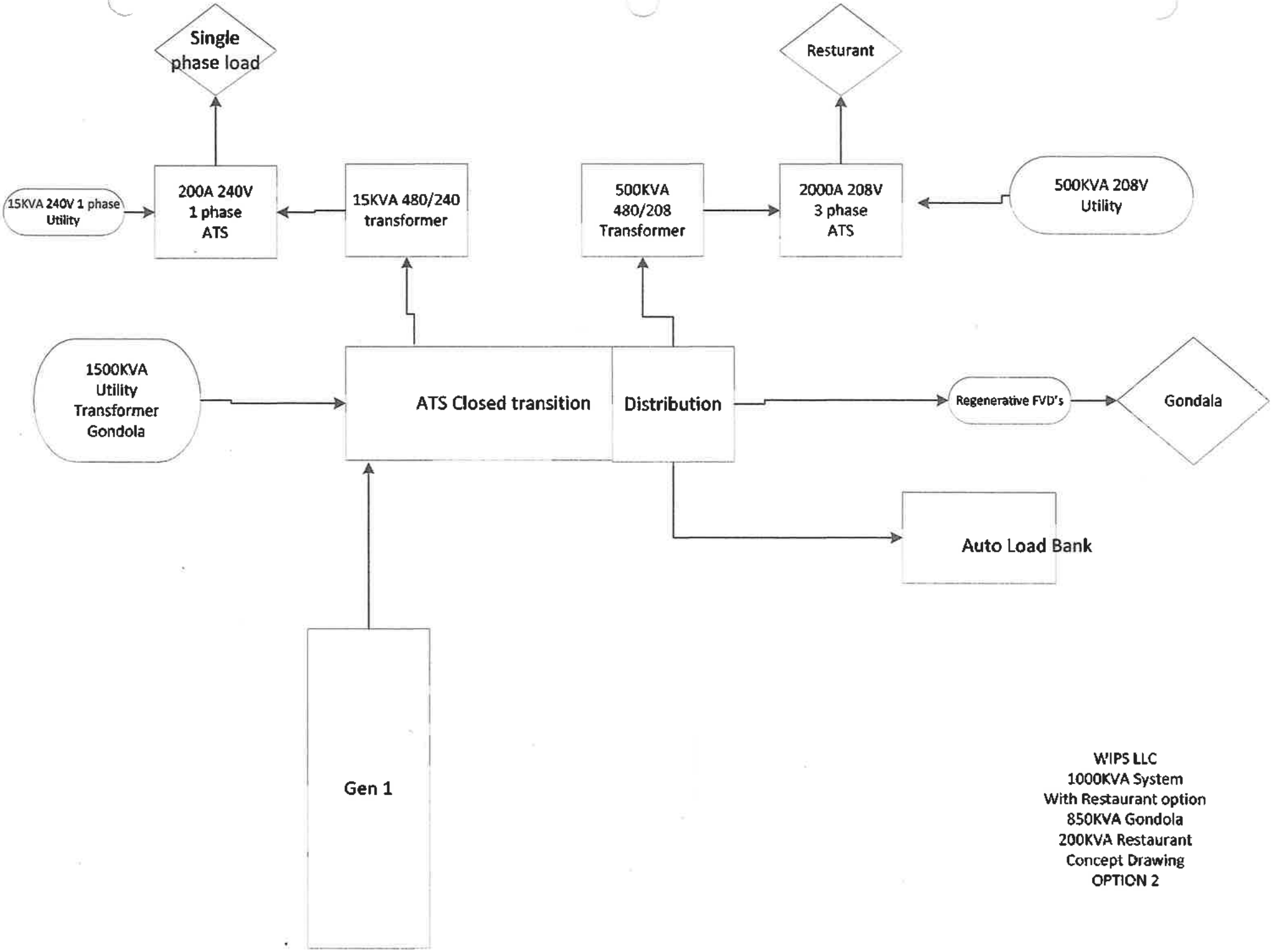

WIPS LLC
1000KVA System
With Restaurant option
850KVA Gondola
200KVA Restaurant
Concept Drawing
OPTION 2

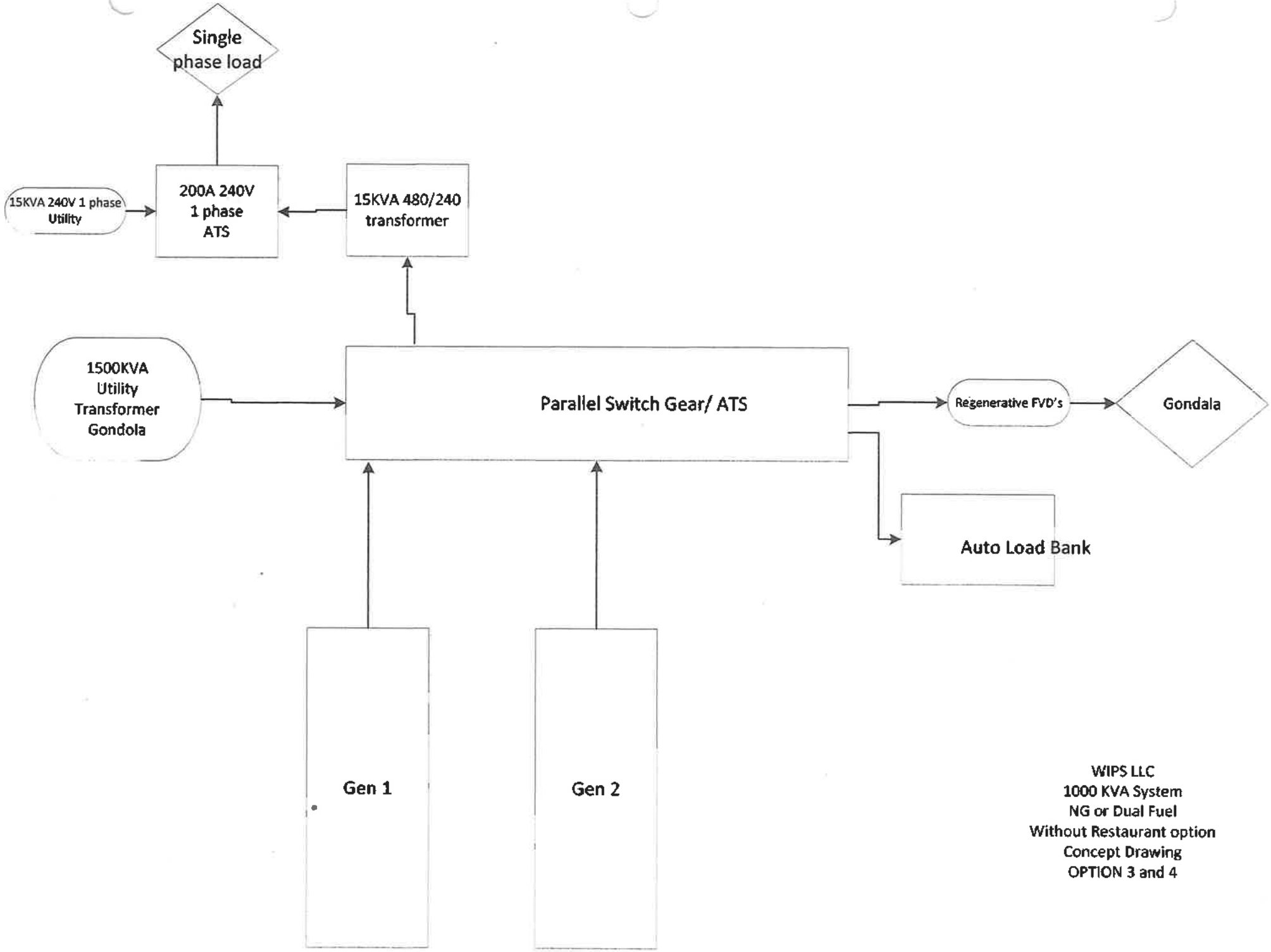

WIPS LLC
1000 KVA System
NG or Dual Fuel
Without Restaurant option
Concept Drawing
OPTION 3 and 4

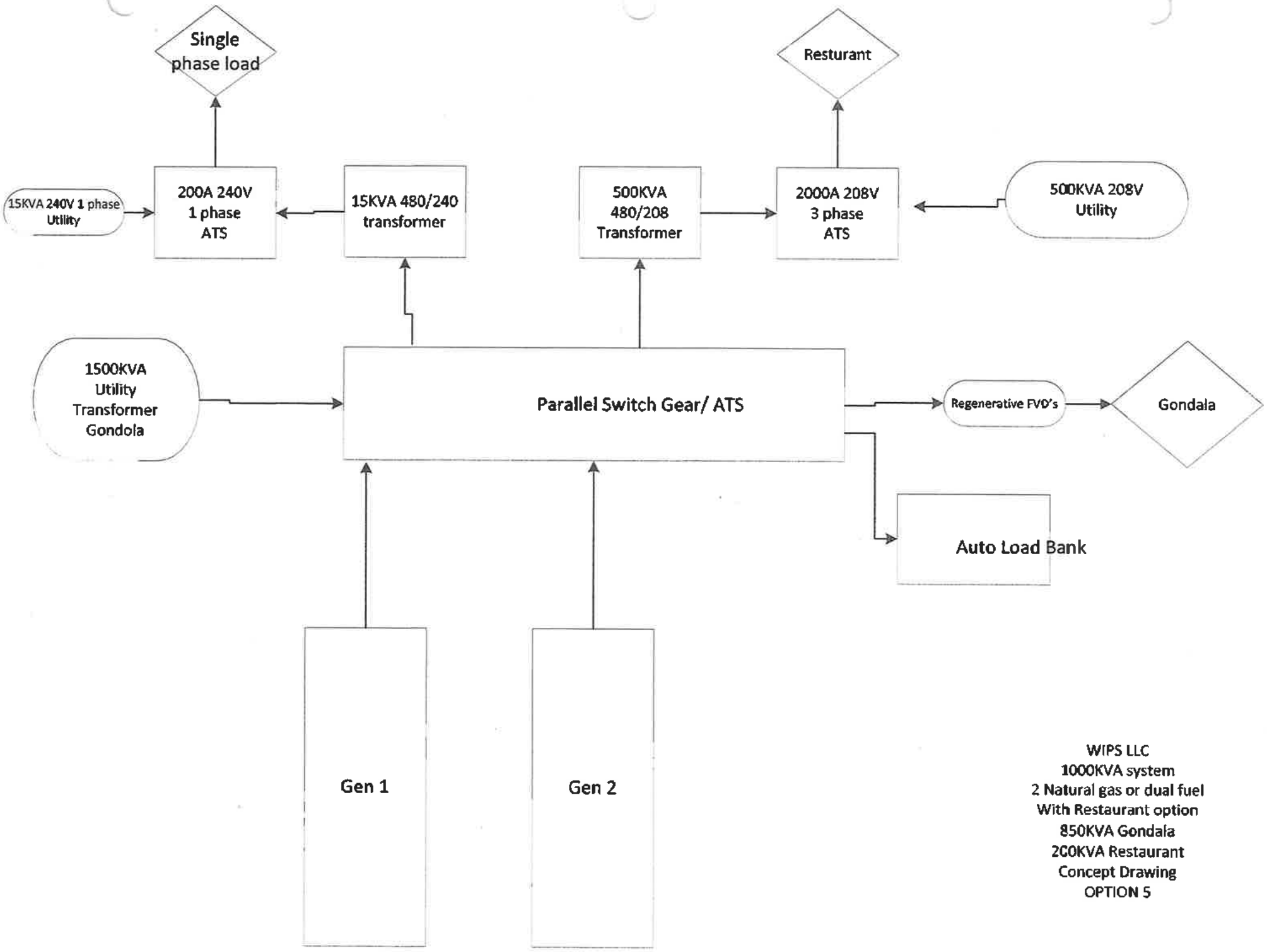

WIPS LLC
1000KVA system
2 Natural gas or dual fuel
With Restaurant option
850KVA Gondala
200KVA Restaurant
Concept Drawing
OPTION 5

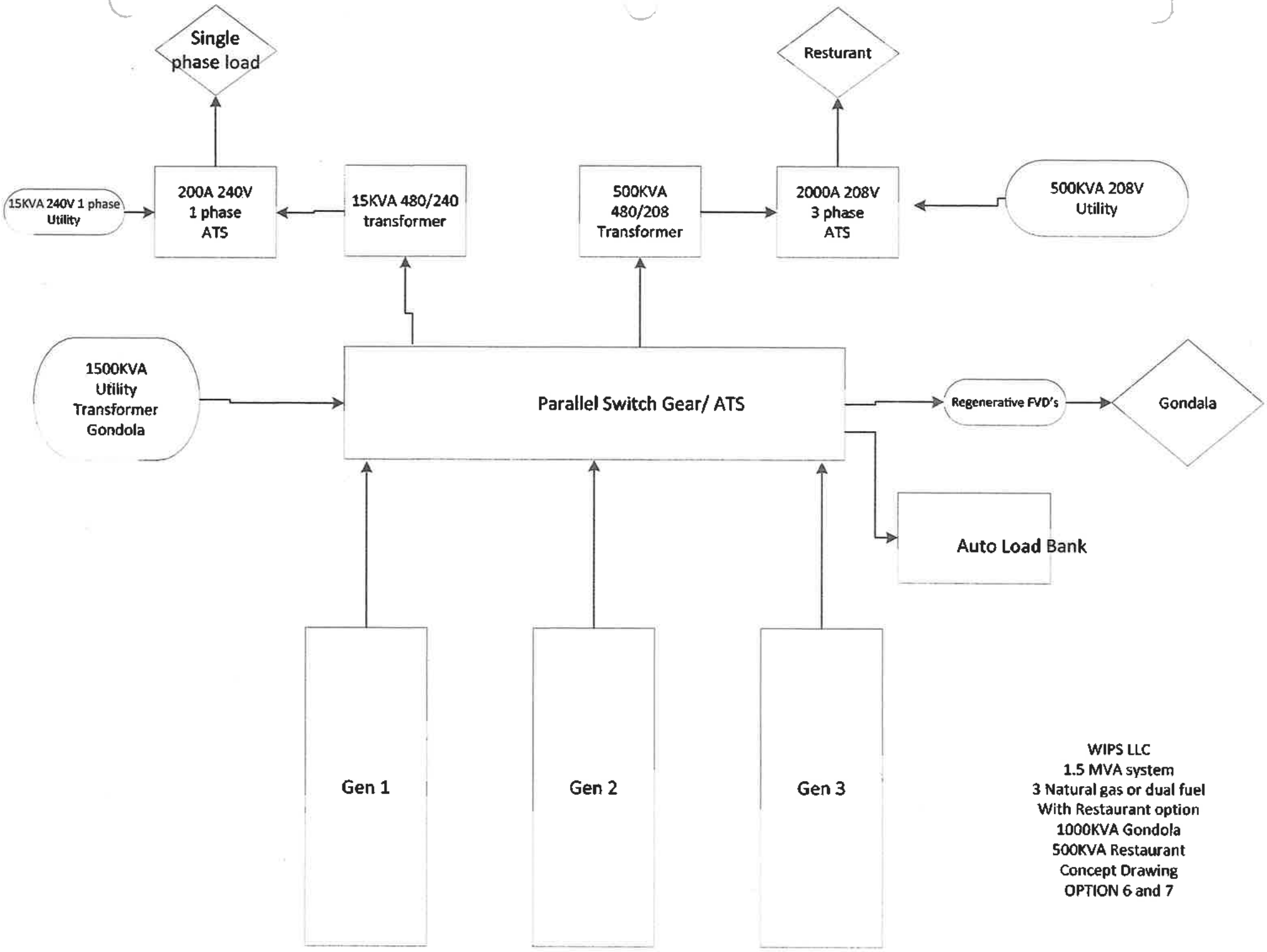

WIPS LLC
1.5 MVA system
3 Natural gas or dual fuel
With Restaurant option
1000KVA Gondola
500KVA Restaurant
Concept Drawing
OPTION 6 and 7

Model: 1000REZK

KOHLER. Power Systems

416-4160 V **Gas**

ISO 9001 KOHLER POWER SYSTEMS NATIONALLY REGISTERED

EPA-Certified for Stationary Emergency and Non-Emergency Applications

Ratings Range

		60 Hz
Standby:	kW	955–1000
	kVA	1193–1250
Prime:	kW	809–880
	kVA	1011–1100

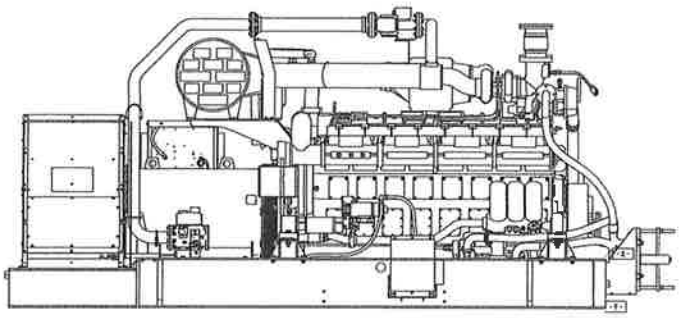

Standard Features

- Kohler Co. provides one-source responsibility for the generating system and accessories.
- The generator set and its components are prototype-tested, factory-built, and production-tested.
- The 60 Hz generator set offers a UL 2200 listing.
- The generator set accepts 65% of rated load in one step.
- The 60 Hz generator set meets NFPA 110 Level 1, Type 60 (for standby operation), when equipped with the necessary accessories and installed per NFPA standards.
- A one-year limited warranty covers all generator set systems and components. Two- and five-year extended limited warranties are also available.
  - The pilot-excited, permanent magnet (PM) alternator provides superior short-circuit capability.

Generator Set Rating

				Lean-Burn Natural Gas			
				130°C Rise Standby Rating		105°C Rise Prime Rating	
Alternator	**Voltage**	**Ph**	**Hz**	**kW/kVA**	**Amps**	**kW/kVA**	**Amps**
5M4044	240/416	3	60	955/1193	1656	809/1011	1403
	277/480	3	60	1000/1250	1503	880/1100	1322
7M4284	347/600	3	60	1000/1250	1202	880/1100	1058
7M4364	2400/4160	3	60	1000/1250	173	880/1100	153

RATINGS: All three-phase units are rated at 0.8 power factor. *Standby Ratings:* The standby rating is applicable to varying loads for the duration of a power outage. There is no overload capability for this rating. *Prime Power Ratings:* At varying load, the number of generator set operating hours is unlimited. A 10% overload capacity is available for one hour in twelve. Ratings are in accordance with ISO-8528-1 and ISO-3046-1. For limited running time and continuous ratings, consult the factory. Obtain technical information bulletin (TIB-101) for ratings guidelines, complete ratings definitions, and site condition derates. The generator set manufacturer reserves the right to change the design or specifications without notice and without any obligation or liability whatsoever.

Alternator Specifications

Specifications	Alternator
Type	4-Pole, Rotating-Field
Exciter type	Brushless, Permanent-Magnet Pilot Exciter
Voltage regulator	Solid State, Volts/Hz
Insulation:	NEMA MG1
Material	Class H, Synthetic, Nonhygroscopic
Temperature rise	130°C Standby 105°C Prime
Bearing: quantity, type	1, Sealed
Coupling	Flexible Disc
Amortisseur windings	Full
Voltage regulation, no-load to full-load	DVR2000EC+
Rotor balancing	125%
Unbalanced load capability	100% of Rated Standby Current
Peak motor starting kVA:	(35% dip for voltages below)
480 V 5M4044 (4 bus bar)	3900 (60Hz)
600 V 7M4284 (4 bus bar)	3200 (60Hz)
4160 V 7M4364 (6 lead)	3300 (60Hz)

- NEMA MG1, IEEE, and ANSI standards compliance for temperature rise and motor starting.
- Sustained short-circuit current of up to 300% of the rated current for up to 10 seconds.
- Sustained short-circuit current enabling downstream circuit breakers to trip without collapsing the alternator field.
- Self-ventilated and dripproof construction.
- Superior voltage waveform from a two-thirds pitch stator and skewed rotor.
- Digital solid-state, volts-per-hertz voltage regulator with ±0.25% no-load to full-load regulation.
- Brushless alternator with brushless pilot exciter for excellent load response.

Application Data

Engine

Engine Specifications	
Manufacturer	Dresser Rand
Engine model	SFGLD480
Engine type	48 L, 4-Cycle, Turbocharged, Charge Air-Cooled
Cylinder arrangement	V-16
Displacement, L (cu. in.)	47.9 (2921)
Bore and stroke, mm (in.)	152 x 165 (5.98 x 6.50)
Compression ratio Standby and Prime:	9.2:1
Piston speed, m/min. (ft./min.)	594 (1949)
Rated rpm	1800
Max. power at rated rpm, kWm (BHP) Standby: Prime:	 1060 (1421) 922 (1236)
Cylinder head material	Cast Iron
Crankshaft material	Press-forge hardened and tempered alloy steel
Governor: type	Electronic
Frequency regulation, no-load to full-load	Isochronous
Frequency regulation, steady state	±0.5%
Frequency	Fixed
Air cleaner type, all models	Dry

Exhaust

Exhaust System	
Exhaust manifold type	Wet
Exhaust flow at rated kW, kg/hr. (cfm) Standby Prime	 5820 (6601) 5300 (6010)
Exhaust temperature at rated kW, dry exhaust, °C (°F) Standby Prime	 449 (840) 453 (847)
Maximum allowable back pressure, kPa (in. Hg)	4.5 (1.3)
Engine exhaust outlet size, mm (in.)	see ADV drawing

Engine Electrical

Engine Electrical System	
Battery charger:	
Ground (negative/positive)	Negative
Volts (DC)	24
Ampere rating	40
Starter motor rated voltage (DC)	24
Battery, recommended cold cranking amps (CCA): Qty., CCA rating each	Four, 1400
Battery voltage (DC)	12

Fuel

Fuel System – Lean Burn	
Fuel type	Natural Gas
Fuel supply line inlet	DN 80
Natural gas fuel supply pressure, kPa (in. H_2O)	8-15 (32-60)

Fuel supply pressure, measured at the generator set fuel inlet downstream of any fuel system equipment accessories.

Fuel Composition Limits	Pipeline Nat. Gas
Methane number	>75.0
C_4 and higher, % by volume	<2.0
Solid particles (dust)	
Size µm	<5
Concentration mg/m_n^3	<10
Gas humidity	<80%
Lower heating value, MJ/m_n^3 (Btu/ft^3)	37.5 – 42 (950 – 1050)

Lubrication

Lubricating System	
Type	Full Pressure
Oil pan capacity, L (qt.)	233 (246)
Oil filter: quantity, type	3, Cartridge
Oil cooler	Water-Cooled

Cooling

Engine Cooling System	
Ambient temperature, °C (°F)	
Standard	0 (32) to 50 (122)
With cold weather kit	-18 to 50 (0 to 122)
Engine jacket water capacity, L (gal.)	250 (66.0)
Rated engine jacket water flow, Lpm (gpm)	1667 (440)
Heat rejected to cooling water at rated kW, wet exhaust, kW (Btu/min.)	
Standby	1090 (61990)
Prime	998 (56760)
Water pump type	Centrifugal – Mechanical Drive
Engine cooling connections	
Water inlet:	DN 100
Water outlet:	DN 80
Pumping head at rated flow, kPa (psi)	232 (33.6)
Engine restriction at rated flow, kPa (psi)	38 (5.5)
Max. allowable restriction external to the engine, kPa (psi)	194 (28.1)
Max. engine coolant pressure, kPa (psi)	400 (58.0)
Max. engine outlet coolant temp., °C (°F)	90 (194)
NPSH limit at 84°C, kPa (psi), absolute	40 (5.8)

Operation Requirements

Air Requirements	
Combustion air, kg/hr. (cfm)†	
Standby	5610 (2751)
Prime	5100 (2501)
Heat rejected to ambient air:	
Engine, kW (Btu/min.)	
Standby	48 (2730)
Prime	46 (2616)
Alternator, kW (Btu/min.)	49 (2810)

† Air density = 1.20 kg/m^3 (0.075 lbm/ft^3)

Fuel Consumption‡

Natural Gas, m^3/hr. (cfh) at % load	Standby Rating	
100%	287	(10135)
75%	221	(7804)
50%	156	(5509)
25%	91	(3213)
Natural Gas, m^3/hr. (cfh) at % load	**Prime Rating**	
100%	260	(9181)
75%	202	(7133)
50%	143	(5049)
25%	85	(3001)

‡ Nominal fuel rating: Natural gas, 37 MJ/m^3 (1000 $Btu/ft.^3$)

Controller

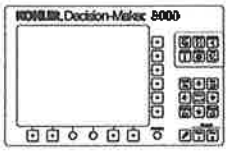

Decision-Maker® 8000 Controller
Provides advanced control, system monitoring, and system diagnostics with remote monitoring capabilities for paralleling multiple generator sets.

- Large, color display with intuitive local data access
- Measurements are selectable in metric or English units
- Communication with serial (RS485) and Ethernet (RJ45)
- Stores up to 4000 records in Event History
- Data logging and trending for easy troubleshooting
- USB flash disk for file storage of data
- Integrated PLC programmable function for advanced input and output configuration
- Supports paralleling up to 32 generators (with paralleling option)

KOHLER CO., Kohler, Wisconsin 53044 USA
Phone 920-457-4441, Fax 920-459-1646
For the nearest sales and service outlet in the US and Canada, phone 1-800-544-2444
KOHLERPower.com

Kohler Power Systems
Asia Pacific Headquarters
7 Jurong Pier Road
Singapore 619159
Phone (65) 6264-6422, Fax (65) 6264-6455

Standard Features

- Alternator Protection
- Battery Charger, Equalize/Float Type
- Closed Crankcase Ventilation
- Local Emergency Stop Switch
- Block Heater
- EPA Certification
- Flexible Exhaust Connector, Stainless Steel
- Secondary Gas Solenoid Valve
- Dry Contact Kit (isolated alarm)
- Air Cleaner Restriction Indicator
- Engine Oil Added
- Operation and Installation Literature
- Common Fault Relay
- Run Relay

Available Options

Approvals and Listings

- ☐ CSA Approval
- ☐ UL 2200 Listing
- ☐ NFPA 110, Level 1 (Standby, Type 60)

Exhaust System

- ☐ Exhaust Silencer, Critical

Fuel System

- ☐ Gas Filter

Controller

- ☐ Remote Emergency Stop
- ☐ Paralleling
- ☐ Remote Annunciator

Cooling System

- ☐ Remote Cooling System
- ☐ Low Coolant Level Shutdown (available with optional remote cooling system)

Electrical System

- ☐ Alternator Strip Heater (available up to 600 volt)
- ☐ Battery
- ☐ Battery Rack and Cables
- ☐ Battery Heater
- ☐ Line Circuit Breaker (NEMA1 enclosure)
- ☐ Line Circuit Breaker with Shunt Trip (NEMA1 enclosure)

Miscellaneous

- ☐ Vibration Isolation
- ☐ Certified Test Report
- ☐ Rated Power Factor Testing

Literature

- ☐ General Maintenance
- ☐ NFPA 110
- ☐ Overhaul
- ☐ Production

Warranty

- ☐ 2-Year, Standby Extended Limited
- ☐ 2-Year, Prime Extended Limited
- ☐ 5-Year, Standby Extended Limited
- ☐ 5-Year, Prime Extended Limited

Other Options

- ☐ _____
- ☐ _____
- ☐ _____
- ☐ _____

Dimensions and Weights

Overall Size, L x W x H, max., mm (in.):	5528 x 1948 x 2465 (217.6 x 76.7 x 97)
Weight, wet, max., kg (lb.):	10275 (22653)

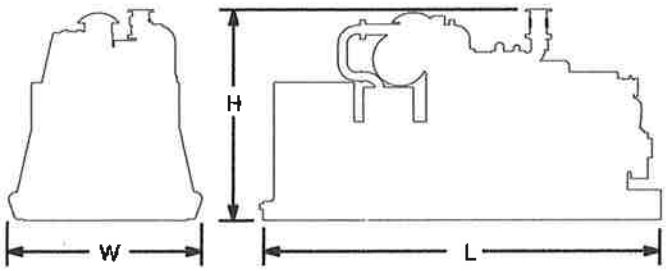

NOTE: This drawing is provided for reference only and should not be used for planning installation. Contact your local distributor for more detailed information.

DISTRIBUTED BY:

© 2015 by Kohler Co. All rights reserved.

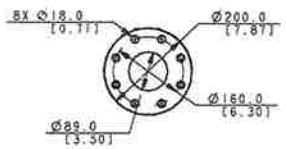

DETAIL D
FUEL INLET
USE WITH DIN80 / DIN2576

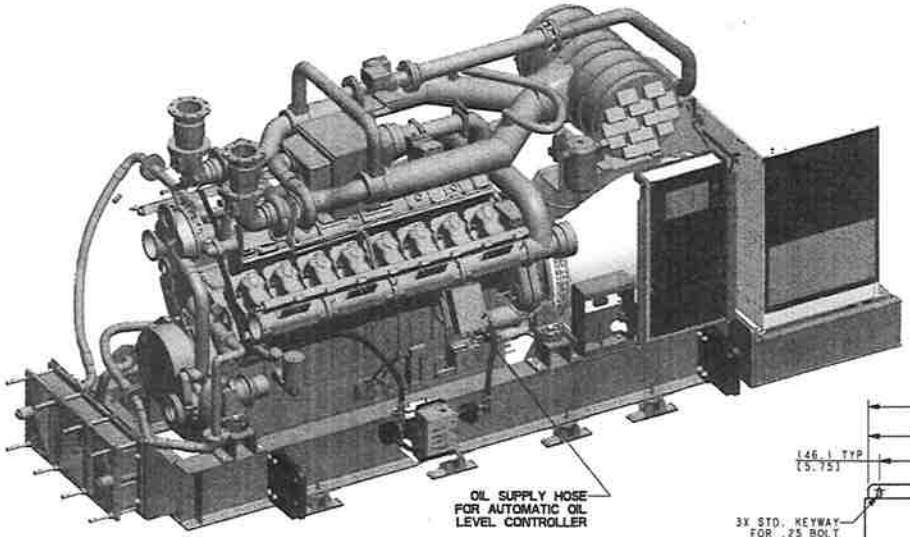

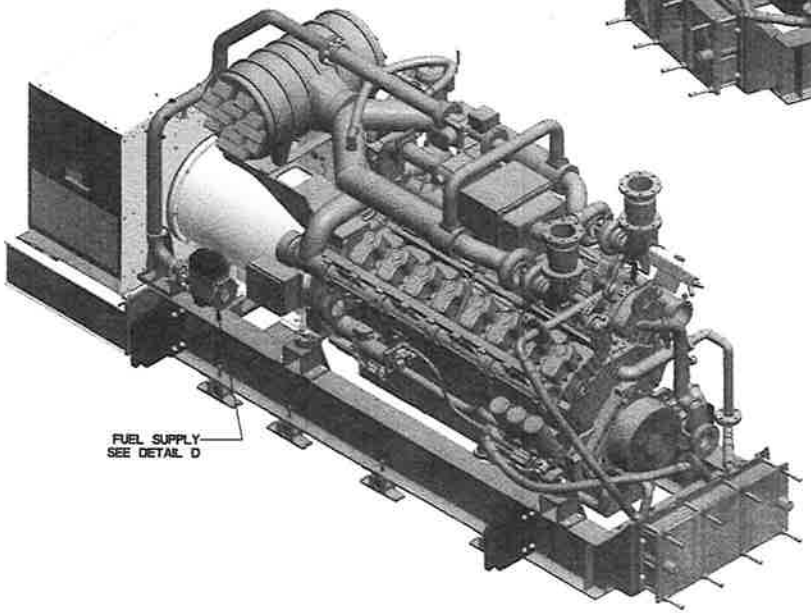

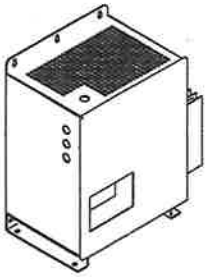

BATTERY CHARGER
MOUNTING DETAIL

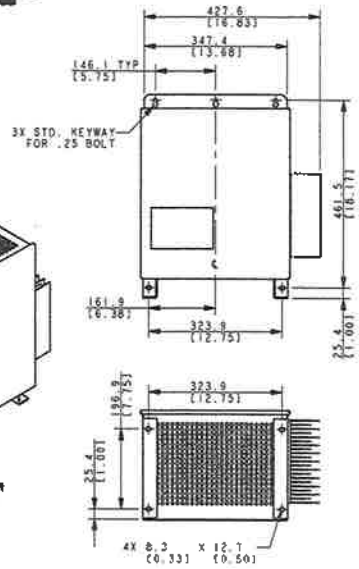

REV	DATE	2W COMPOSITE DWGS. SEE PART NO. FOR REVISION LEVEL	BY
-	11-3-15	NEW DRAWING [CT129800]	TAK

UNLESS OTHERWISE SPECIFIED:
(1) DIMENSIONS ARE IN MILLIMETERS
(2) TOLERANCES ARE:
X.XX ± 0.25
X.X ± 0.5
X.X ± 1.0
ANGLES ± 0° 30'
SURFACE FINISH
MAX.

DATE CODE PROJECTION

APPROVALS		DATE
DR/DES	TAK	3-17-15
ENGINEER	RAM	3-17-15
APPROVED	RAM	3-17-15

KOHLER CO. METRIC PRO-E

POWER SYSTEMS, KOHLER, WI 53044 U.S.A.

THIS DRAWING IN DESIGN AND DETAIL IS KOHLER CO. PROPERTY AND MUST NOT BE USED EXCEPT IN CONNECTION WITH KOHLER CO. WORK. ALL RIGHTS OF DESIGN OR INVENTION ARE RESERVED.

TITLE
DIMENSION PRINT, 1000REZK

SCALE: 0.08 | SHEET 3 of 3

DWG NO. ADV-8778 | D

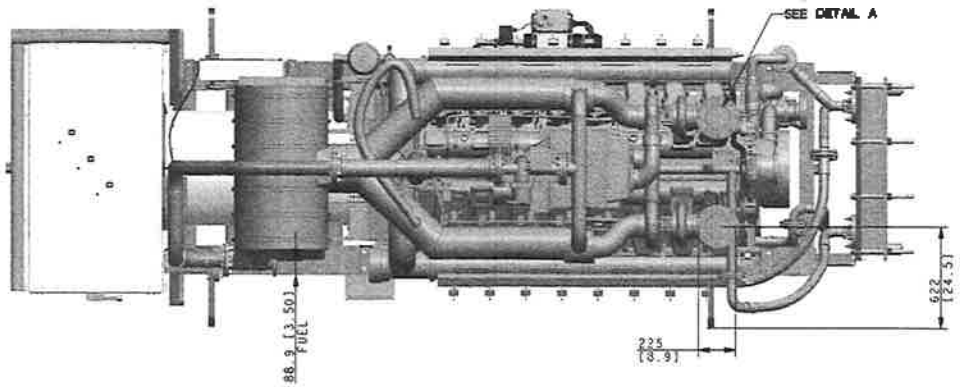

DETAIL A
EXHAUST

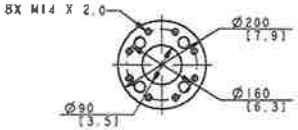

DETAIL B
WATER OUTLET
USE WITH DN80 DIN2576

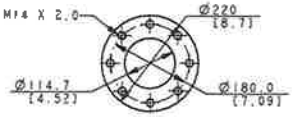

DETAIL C
WATER INLET
USE WITH DN80 DIN2576

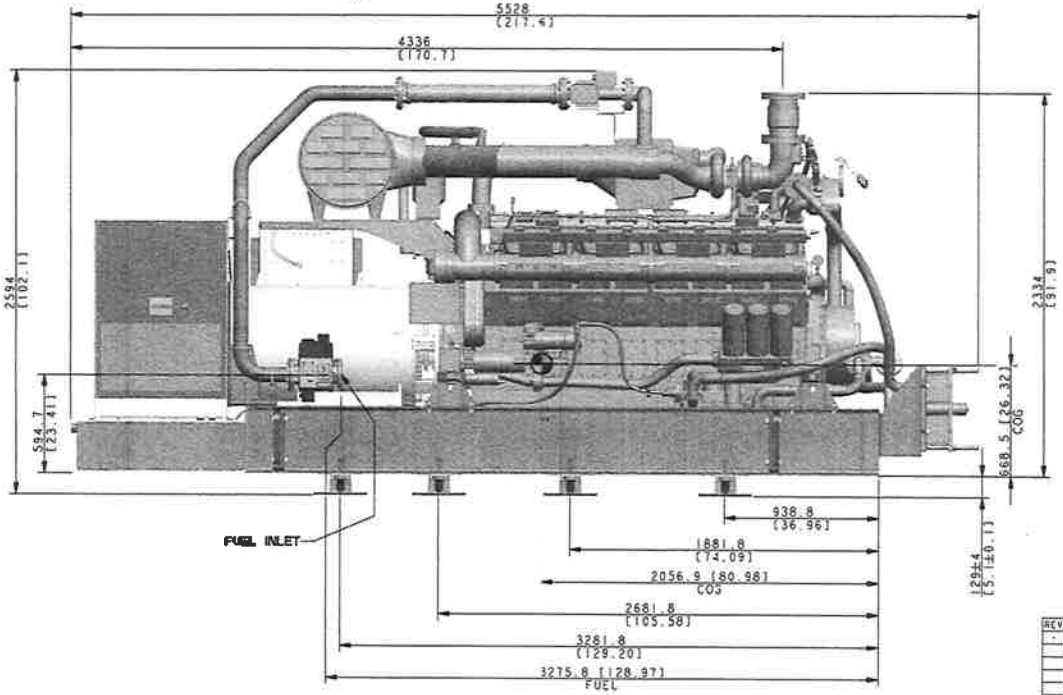

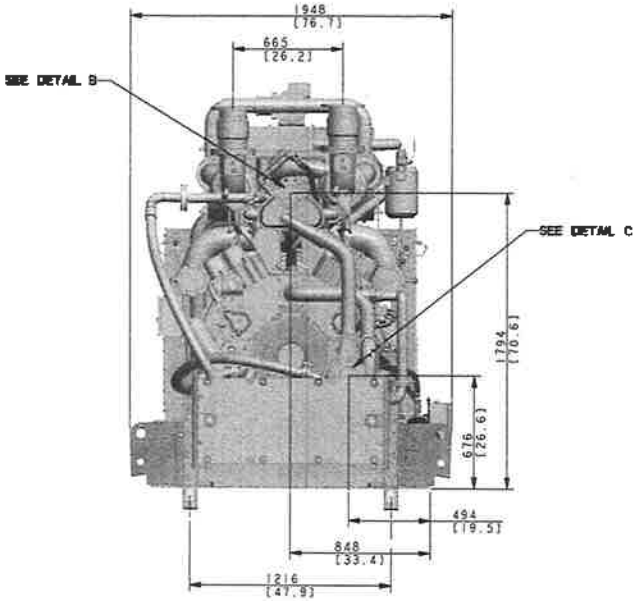

DIMENSIONS ARE SPECIFIC TO 1000REZX WITH DM4044 ALTERNATOR

REV	DATE	DR COMPOSITE DWGS. SEE PART NO. FOR REVISION LEVEL	BY
-	11-3-15	NEW DRAWING (CT125800)	TAK

UNLESS OTHERWISE SPECIFIED: (1) DIMENSIONS ARE IN MILLIMETERS (2) TOLERANCES ARE: X.XX ± 0.25, X.X ± 1.0, X ± 2.0, ANGLES ± 0° 30'. SURFACE FINISH 125 MAX.

FALSE WORLD PROJECTION

APPROVALS		DATE
DRAWN	TAK	3-17-15
CHECKED	RAM	3-17-15
APPROVED	RAM	3-17-15

KOHLER CO. METRIC | PRO-E

POWER SYSTEMS, KOHLER, WI 53044 U.S.A.

THIS DRAWING IN DESIGN AND DETAIL IS KOHLER CO. PROPERTY AND MUST NOT BE USED EXCEPT IN CONNECTION WITH KOHLER CO. WORK. ALL RIGHTS OF DESIGN OF INVENTION ARE RESERVED.

TITLE: DIMENSION PRINT, 1000REZX

SCALE 0.08 | SHEET 1 of 3

DR NO. ADV-8779 | D

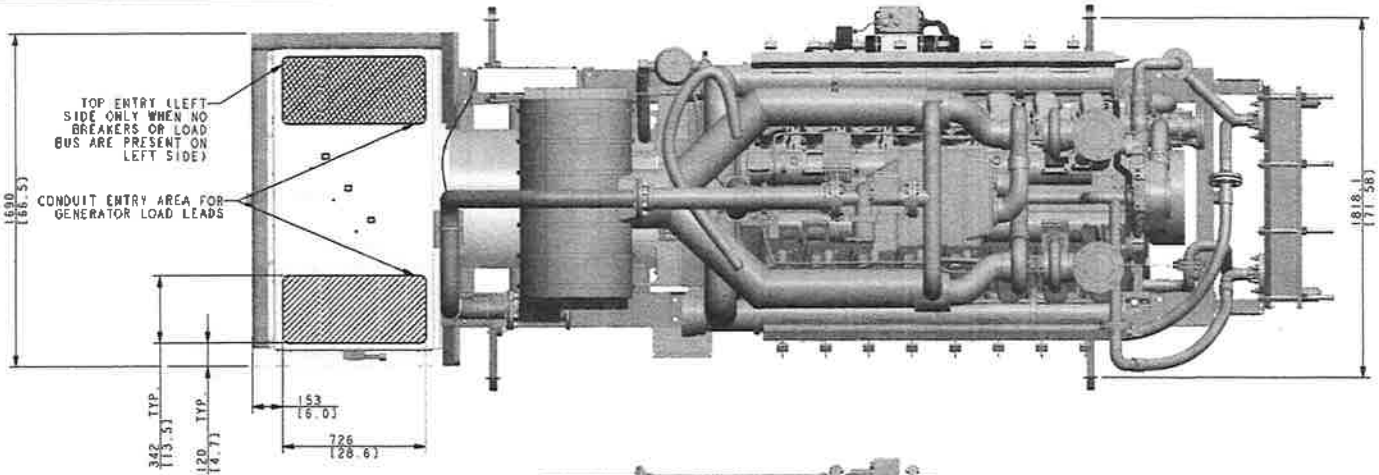

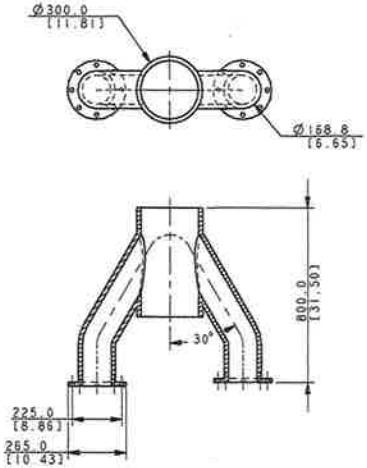

V-ENGINE EXHAUST Y-PIPE

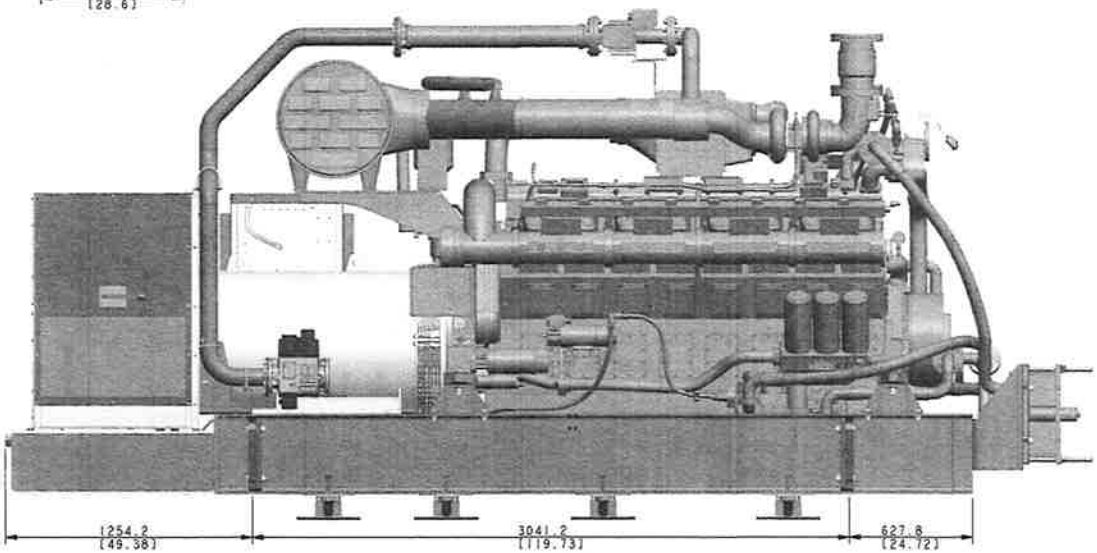

LIFTING PROVISIONS

DIMENSIONS ARE SPECIFIC TO 1000REZK WITH SM4044 ALTERNATOR

REV	DATE	ON COMPOSITE DWGS, SEE PART NO. FOR REVISION LEVEL	BY
-	11-3-15	NEW DRAWING (CT129800)	TAK

UNLESS OTHERWISE SPECIFIED: (1 DIMENSIONS ARE IN MILLIMETERS (2 TOLERANCES ARE: X.XX ± 0.25, X.X ± 1.5, X ± 3, ANGLES ± 0° 30'. SURFACE FINISH 3.2 MAX.

THIRD ANGLE PROJECTION

APPROVALS		DATE
DRAWN	TAK	3-17-15
CHECKED	RAM	3-17-15
APPROVED	RAM	3-17-15

KOHLER CO. METRIC PRO-E

POWER SYSTEMS, KOHLER, WI 53044 U.S.A.

THIS DRAWING IN DESIGN AND DETAIL IS KOHLER CO. PROPERTY AND MUST NOT BE USED EXCEPT IN CONNECTION WITH KOHLER CO. WORK. ALL RIGHTS OF DESIGN OR INVENTION ARE RESERVED.

TITLE: DIMENSION PRINT, 1000REZK

SCALE 0.09 | SHT NO. | SHEET 2 of 3

DWG NO. ADV-8778 | D

Model: 500REZK

KOHLER. Power Systems

208–600 V **Gas**

ISO 9001 KOHLER POWER SYSTEMS NATIONALLY REGISTERED

EPA-Certified for Stationary Emergency and Non-Emergency Applications

Ratings Range

		60 Hz
Standby:	**kW**	490–500
	kVA	612–625
Prime:	**kW**	430–435
	kVA	537–543

Standard Features

- Kohler Co. provides one-source responsibility for the generating system and accessories.
- The generator set and its components are prototype-tested, factory-built, and production-tested.
- The 60 Hz generator set offers a UL 2200 listing.
- The generator set accepts rated load in one step.
- The 60 Hz generator set meets NFPA 110 Level 1, Type 60 (for standby operation), when equipped with the necessary accessories and installed per NFPA standards.
- A one-year limited warranty covers all generator set systems and components. Two- and five-year extended limited warranties are also available.

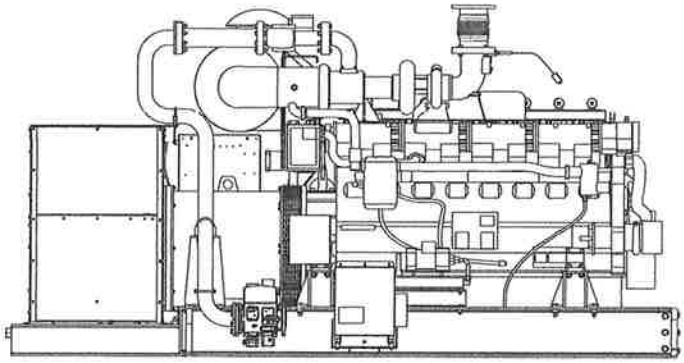

Generator Set Rating

				Lean-Burn Natural Gas			
				130°C Rise Standby Rating		105°C Rise Prime Rating	
Alternator	**Voltage**	**Ph**	**Hz**	**kW/kVA**	**Amps**	**kW/kVA**	**Amps**
5M4028	120/208	3	60	500/625	1734	435/543	1508
	127/220	3	60	500/625	1639	435/543	1426
	139/240	3	60	500/625	1503	435/543	1307
	240/416	3	60	500/625	867	435/543	754
	277/480	3	60	500/625	751	435/543	654
5M4270	347/600	3	60	490/612	589	430/537	517

RATINGS: All three-phase units are rated at 0.8 power factor. *Standby Ratings:* The standby rating is applicable to varying loads for the duration of a power outage. There is no overload capability for this rating. *Prime Power Ratings:* At varying load, the number of generator set operating hours is unlimited. A 10% overload capacity is available for one hour in twelve. Ratings are in accordance with ISO-8528-1 and ISO-3046-1. For limited running time and continuous ratings, consult the factory. Obtain technical information bulletin (TIB-101) for ratings guidelines, complete ratings definitions, and site condition derates. The generator set manufacturer reserves the right to change the design or specifications without notice and without any obligation or liability whatsoever.

KOHLER CO., Kohler, Wisconsin 53044 USA
Phone 920-457-4441, Fax 920-459-1646
For the nearest sales and service outlet in the US and Canada, phone 1-800-544-2444
KOHLERPower.com

Kohler Power Systems
Asia Pacific Headquarters
7 Jurong Pier Road
Singapore 619159
Phone (65) 6264-6422, Fax (65) 6264-6455

Standard Features

- Alternator Protection
- Battery Charger, Equalize/Float Type
- Closed Crankcase Ventilation
- Local Emergency Stop Switch
- Block Heater
- EPA Certification
- Flexible Exhaust Connector, Stainless Steel
- Secondary Gas Solenoid Valve
- Dry Contact Kit (isolated alarm)
- Air Cleaner Restriction Indicator
- Engine Oil Added
- Operation and Installation Literature
- Common Fault Relay
- Run Relay

Available Options

Approvals and Listings

- ☐ CSA Approval
- ☐ UL 2200 Listing
- ☐ NFPA 110, Level 1 (Standby, Type 60)

Exhaust System

- ☐ Exhaust Silencer, Critical

Fuel System

- ☐ Gas Filter

Controller

- ☐ Remote Emergency Stop
- ☐ Paralleling
- ☐ Remote Annunciator

Cooling System

- ☐ Remote Cooling System
- ☐ Low Coolant Level Shutdown (available with optional remote cooling system)

Electrical System

- ☐ Alternator Strip Heater (available up to 600 volt)
- ☐ Battery
- ☐ Battery Rack and Cables
- ☐ Battery Heater
- ☐ Line Circuit Breaker (NEMA1 enclosure)
- ☐ Line Circuit Breaker with Shunt Trip (NEMA1 enclosure)

Miscellaneous

- ☐ Vibration Isolation
- ☐ Certified Test Report
- ☐ Rated Power Factor Testing

Literature

- ☐ General Maintenance
- ☐ NFPA 110
- ☐ Overhaul
- ☐ Production

Warranty

- ☐ 2-Year, Standby Extended Limited
- ☐ 2-Year, Prime Extended Limited
- ☐ 5-Year, Standby Extended Limited
- ☐ 5-Year, Prime Extended Limited

Other Options

- ☐ _____
- ☐ _____
- ☐ _____
- ☐ _____

Dimensions and Weights

Overall Size, L x W x H, max., mm (in.):	4126 x 1987 x 2152 (162.4 x 78.2 x 84.7)
Weight, wet, max., kg (lb.):	6400 (14110)

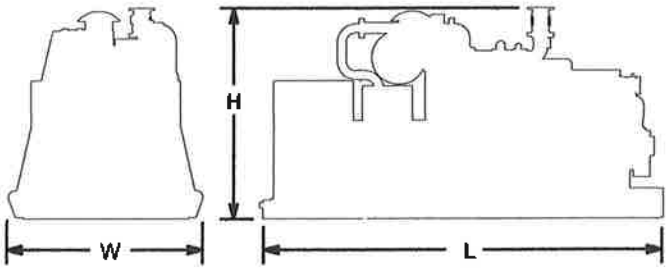

NOTE: This drawing is provided for reference only and should not be used for planning installation. Contact your local distributor for more detailed information.

DISTRIBUTED BY:

© 2015 by Kohler Co. All rights reserved.

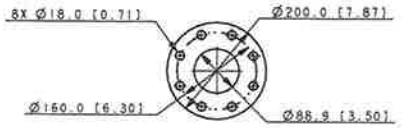

DETAIL D
FUEL INLET
USE WITH DIN 80 / DIN 2576

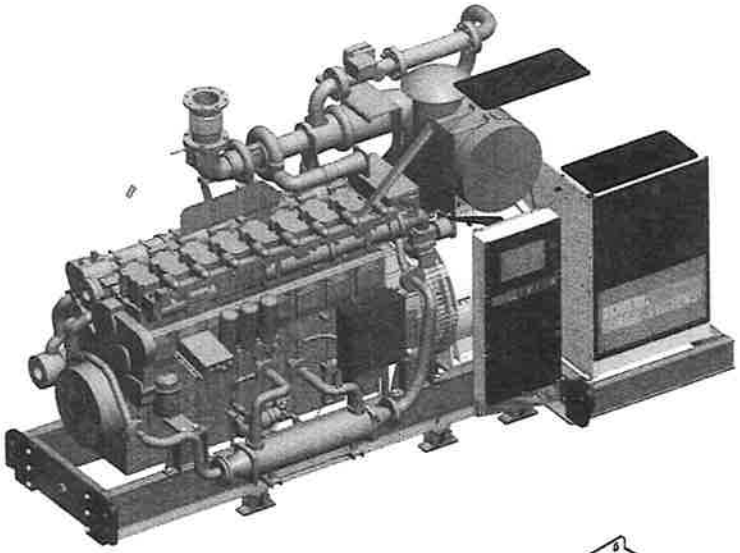

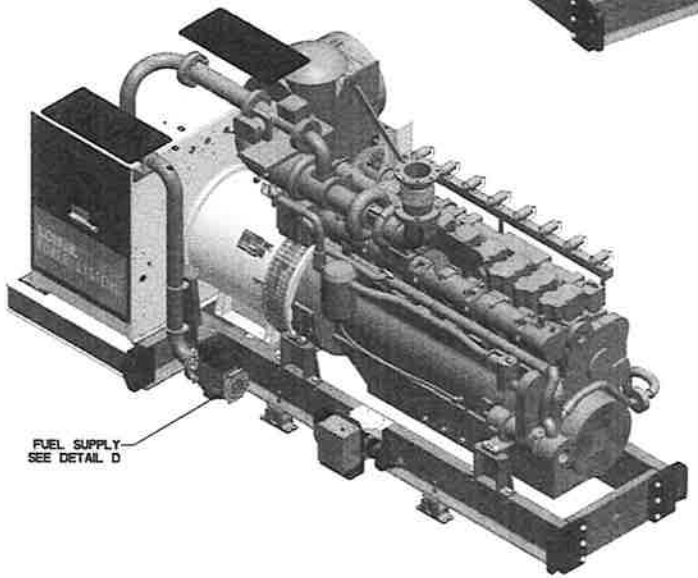

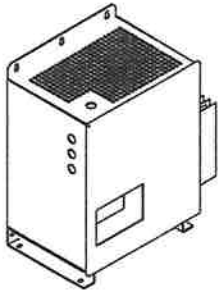

BATTERY CHARGER
MOUNTING DETAIL

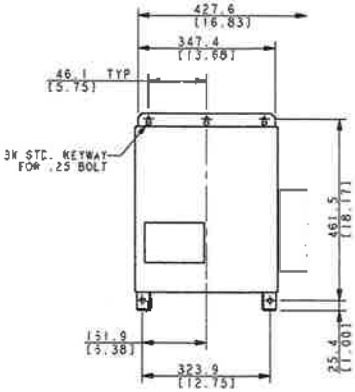

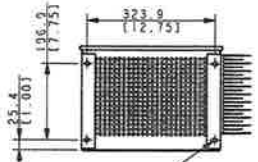

4X Ø8.3 [0.33] X 12.7 [0.50]

REV	DATE	ON COMPOSITE DWGS, SEE PART NO. FOR REVISION LEVEL	BY
-	10-19-15	NEW DRAWING []	SAK

UNLESS OTHERWISE SPECIFIED: (1) DIMENSIONS ARE IN MILLIMETERS (2) TOLERANCES ARE: X.XX ± 0.25 X.X ± 1.0 X.XXX ± 0.5 ANGLES ± 0° 30' SURFACE FINISH 1.6 MAX.

THIRD ANGLE PROJECTION

APPROVALS		DATE
DRAWN	SAK	10-19-15
CHECKED	VPP	10-19-15
APPROVED	RAM	10-19-15

KOHLER CO. METRIC | PRO-E

POWER SYSTEMS, KOHLER, WI 53044 U.S.A.

THIS DRAWING IN DESIGN AND DETAIL IS KOHLER CO. PROPERTY AND MUST NOT BE USED EXCEPT IN CONNECTION WITH KOHLER CO. WORK. ALL RIGHTS OF DESIGN OR INVENTION ARE RESERVED.

TITLE: DIMENSION PRINT, 500REZK

SCALE 0.40 | CAD NO. | SHEET 3 of 3

DWG NO. ADV-8827 | D

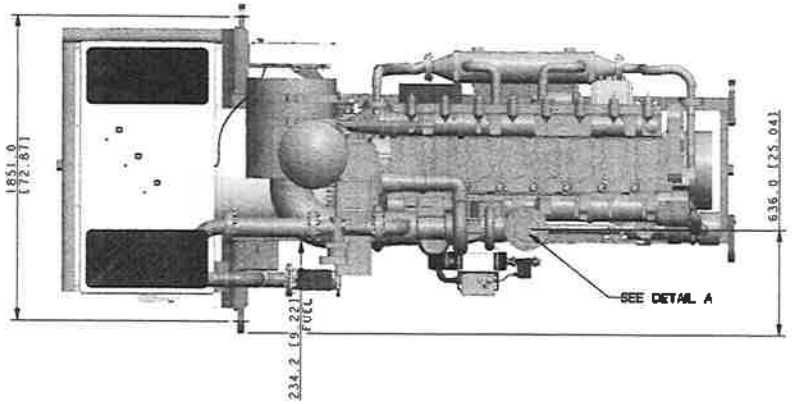

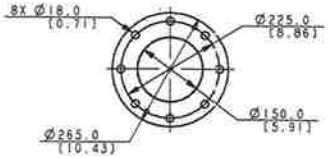

DETAIL A
EXHAUST

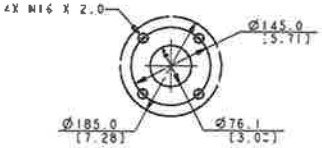

DETAIL C
WATER OUTLET
USE WITH DN 65 / DIN 2576

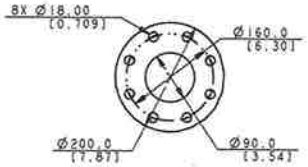

DETAIL B
WATER INLET
USE WITH DN 80 / DIN 2576

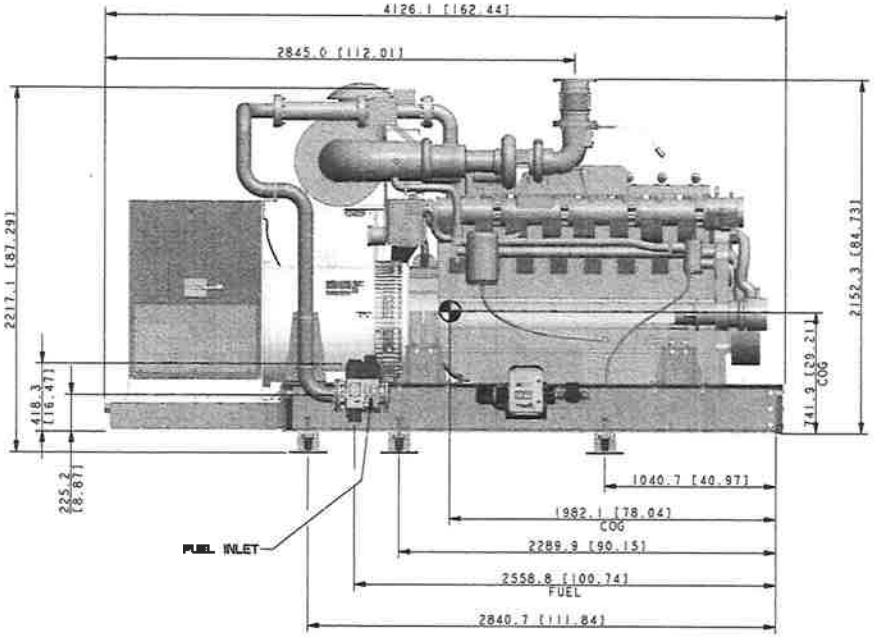

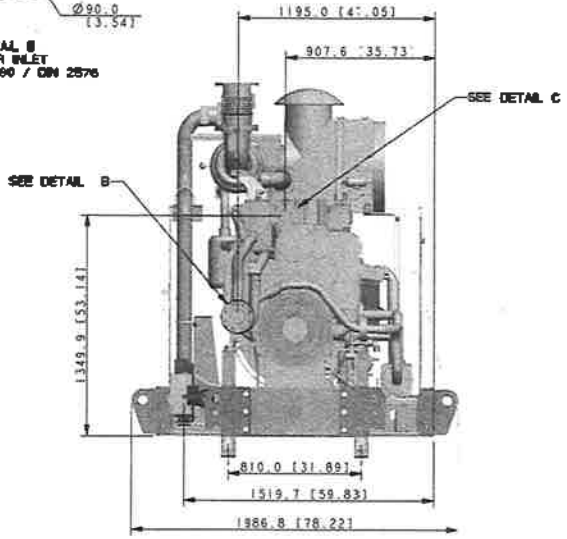

REV	DATE	ON COMPOSITE DWGS, SEE PART NO. FOR REVISION LEVEL	BY
-	10-17-13	NEW DRAWING []	SAK

UNLESS OTHERWISE SPECIFIED: 1) DIMENSIONS ARE IN MILLIMETERS 2) TOLERANCES ARE: X.XX ± 0.20, X.X ± 0.5, X ± 1.5, ANGLES ± 2°

SURFACE FINISH: 125 MAX.

THIRD ANGLE PROJECTION

APPROVALS		DATE
DRAWN	SAK	10-17-13
CHECKED	VPF	10-17-13
APPROVED	RAM	10-17-13

KOHLER CO. METRIC | PRO-E

POWER SYSTEMS, KOHLER, WI 53044 U.S.A.

"THIS DRAWING IN DESIGN AND DETAIL IS KOHLER CO. PROPERTY AND MUST NOT BE USED EXCEPT IN CONNECTION WITH KOHLER CO. WORK. ALL RIGHTS OF DESIGN OR INVENTION ARE RESERVED."

TITLE: DIMENSION PRINT, 500REZK

SCALE: 0.40 | DWG NO. | SHEET: of 3

DWG NO. ADV-8827 | D

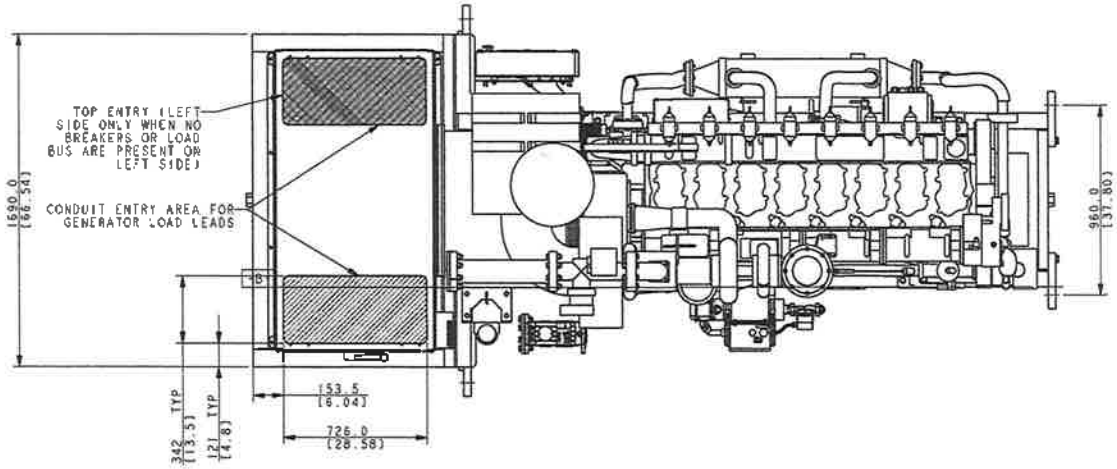

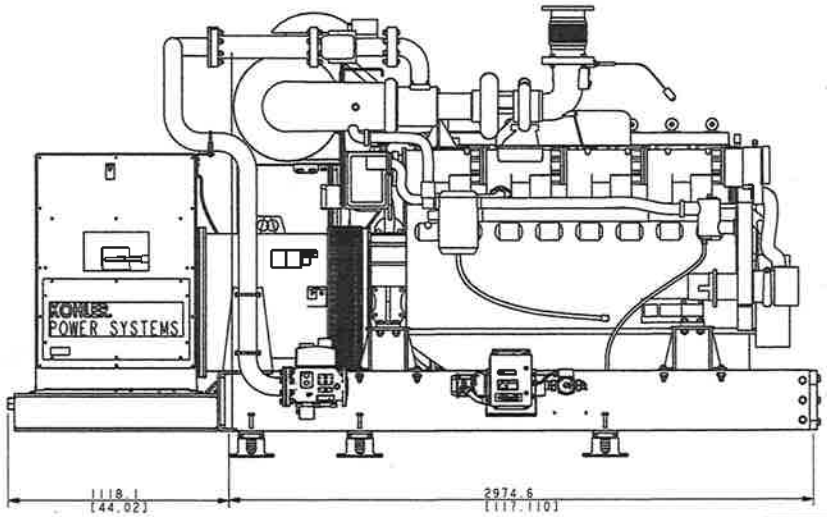

LIFTING PROVISIONS

REV	DATE	ON COMPOSITE DWGS, SEE PART NO. FOR REVISION LEVEL	BY
-	10-20-15	NEW DRAWING []	SAK

UNLESS OTHERWISE SPECIFIED: [] DIMENSIONS ARE IN MILLIMETERS [] TOLERANCES ARE:
X.XX ± 0.25
X.X ± 1.0
X ± 3
ANGLES ± 0° 30'
SURFACE FINISH 125 MAX.
THIRD ANGLE PROJECTION

APPROVALS		DATE
DRAWN	SAK	10-20-15
CHECKED	VPP	10-20-15
APPROVED	RAW	10-20-15

KOHLER CO. METRIC | PRO-E

POWER SYSTEMS, KOHLER, WI 53044 U.S.A.

THIS DRAWING IN DESIGN AND DETAIL IS KOHLER CO. PROPERTY AND MUST NOT BE USED EXCEPT IN CONNECTION WITH KOHLER CO. WORK. ALL RIGHTS OF DESIGN OR INVENTION ARE RESERVED.

TITLE: **DIMENSION PRINT, 500REZK**

SCALE 0.40 | CAD NO. | SHEET 2 of 3

DWG NO. **ADV-8827** | **D**

QUIET POWER RENTAL SERIES

QP 625 *Complete Power Solutions*

Southwest Products

Quiet Power Rental Series - *QP 625*

Southwest Products' Quiet Power 625 generators provide reliable primary and standby power for large construction, rental, and commercial applications. These robust mobile diesel generators use reliable Perkins Tier 2/FLEX diesel engines and a digital controller to monitor the unit while providing continuous operating data.

QP 625

Standby Rating: 625 kVA / 500 kW

Prime Rating: 569 kVA / 455 kW

Reliable, Sturdy, and Environmentally Friendly

- Robust construction
- Heavy duty, 4-cycle, direct injection, turbo charged diesel engine
- Oversized alternator with PMG for better motor starting
- Heavy gauge, powder coated, lockable enclosure
- Dual containment fuel cell with environmental containment basin

Extremely Quiet and Fuel Efficient

- Sound attenuation for superior noise reduction
- EPA Tier 2 FLEX certified
- Electric fuel system and governor control
- Large capacity fuel cell for extended run time

Quiet Power Rental Series - QP 625

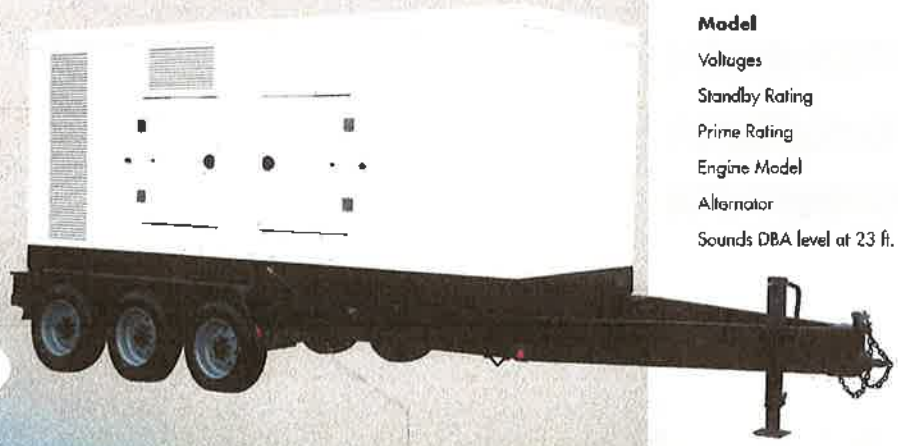

Technical Specifications

Model	QP 625
Voltages	120/208 | 277/480
Standby Rating	625 kVA / 500 kW
Prime Rating	569 kVA / 455 kW
Engine Model	2506C-E15TAG3
Alternator	SWP, Marathon
Sounds DBA level at 23 ft.	75

QP 625

www. Southwest Products .com

Quiet Power Rental Series - *QP 625*

Easy to Use Connection and Service Points

- Digital engine/generator controller with redundant analog gauges/meters
- Multi-voltage switch with utility power in 120/208 mode
- Bus bar and utility outlets for customer connections
- SWP Tough Series TG410 digital genset controller
- Single point lift

FUEL CONSUMPTION

Fuel tank capacity - Gallons	500
Fuel consumption at prime rating	32 gal/h
25% load	14
50% load	20.3
75% load	25.4
100% load	34.9

ENCLOSURE SPECIFICATIONS

Length - Enclosure Only	208"
Width	72"
Height	91.19"
Weight - Dry	15,300 lbs
Length With Trailer	303"
Width With Trailer	102"
Height With Trailer	117"
Weight With Trailer	19,880 lbs
Weight Ready to Run	23,500 lbs

Dimensions

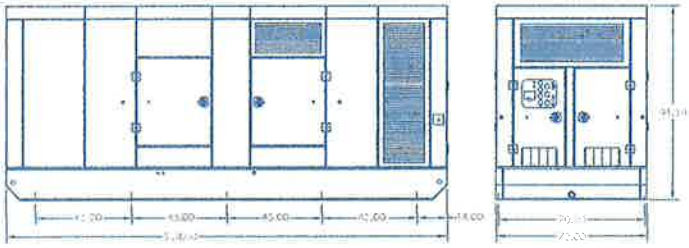

ENGINE SPECIFICATIONS

Engine Mfg	**PERKINS**
Model Number	**2506C-E15TAG3**
Spec #	**MGDF7129**
Prime Output HP	664
Standby Output HP	728
Emissions Certification	Tier 2 / Flex

Generator Output Panel

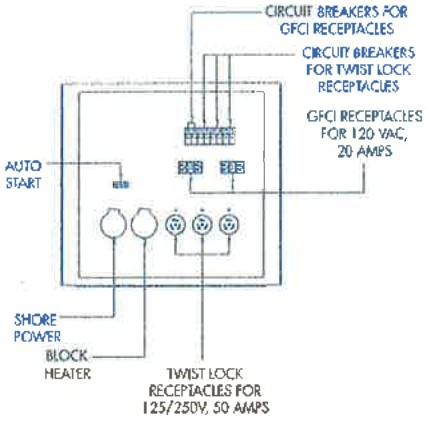

ALTERNATOR SPECIFICATIONS

Available Voltages	120/208 | 277/480
277/480 Volt Prime Amps	677
277/480 Volt Standby Amps	752
120/208 Volt Prime Amps	1560
120/208 Volt Standby Amps	1735

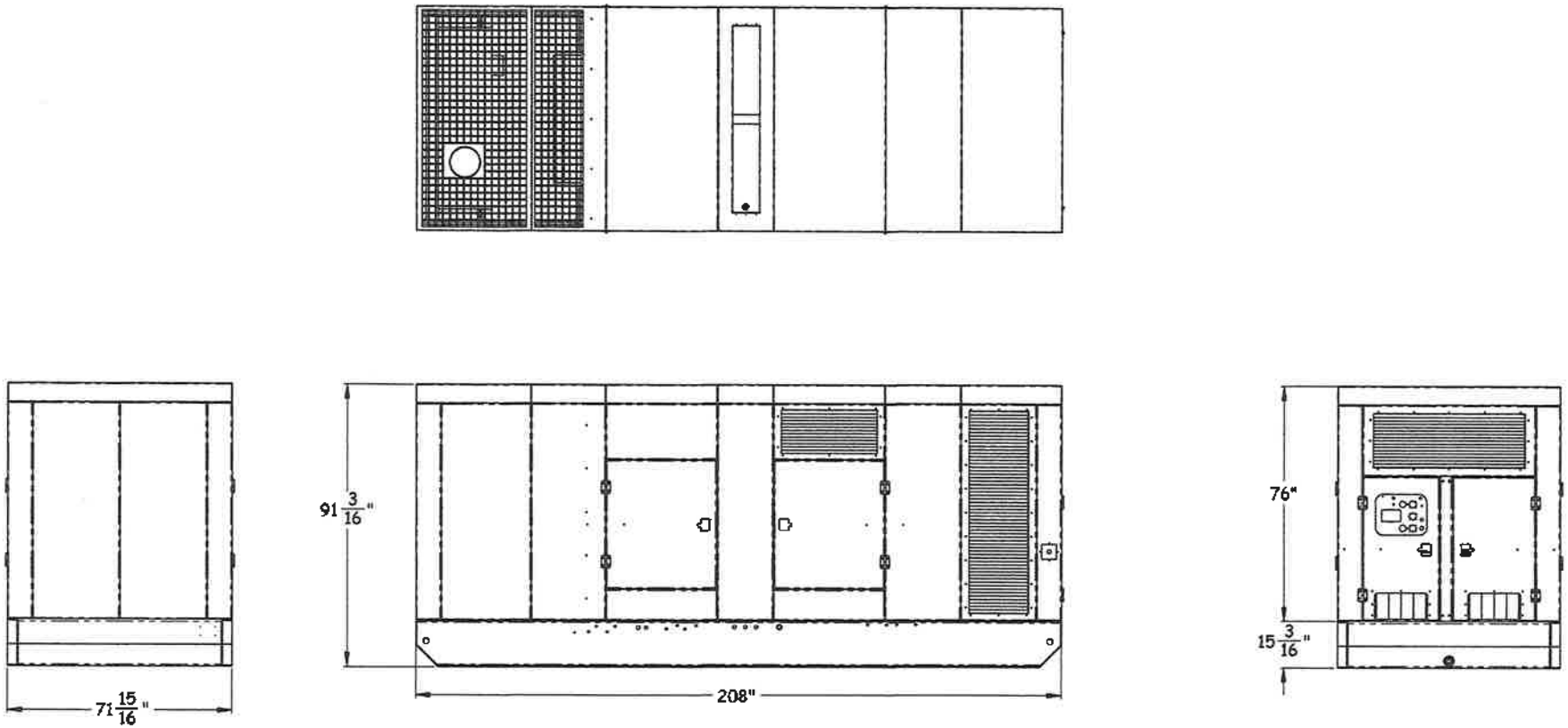

UNLESS OTHERWISE SPECIFIED:		NAME	DATE
DIMENSIONS ARE IN INCHES TOLERANCES: FRACTIONAL ± 1/32" ANGULAR: MACH ±1° BEND ±1° TWO PLACE DECIMAL ±.02 THREE PLACE DECIMAL ±.010	DRAWN		7/6/2012
	CHECKED		
	ECR #	ECR DATE	BY
INTERPRET GEOMETRIC TOLERANCING PER:			
MATERIAL			
FINISH			
DO NOT SCALE DRAWING			

INDEX LOC	NEXT ASSY

PROPRIETARY AND CONFIDENTIAL
THE INFORMATION CONTAINED IN THIS DRAWING IS THE SOLE PROPERTY OF SOUTHWEST PRODUCTS INC. ANY REPRODUCTION IN PART OR AS A WHOLE WITHOUT THE WRITTEN PERMISSION OF SOUTHWEST PRODUCTS INC. IS PROHIBITED.

SWP Southwest Products
11690 NORTH 132nd. AVE
SURPRISE, AZ. 85379
PHONE:877-779-3581

TITLE: QP 500/625

SIZE	DWG. NO.	REV
B	QP400-625	

WEIGHT: | LAST SAVED: 7/6/2012 | SHEET 1 OF 1

GTI Bi-Fuel®

for light and heavy duty diesel engines

CARB CERTIFIED
CONFIGURATION AVAILABLE!

altronic

Operate Your Diesel Engine on Natural Gas

- No engine modifications required
- No power or efficiency losses
- Low cost and easy to install
- Reduces operating costs
- Extends run-time of standby engines
- Lowers emissions
- No high-pressure gas supply
- Allows use of interruptible gas
- State-of-the-art controls and monitoring

The GTI Bi-Fuel* System from Altronic, LLC is an innovative technology that enables operators of light and heavy duty diesel engines to substantially reduce operational costs and lower emissions (with use of DOC) by substituting diesel fuel with lower cost, cleaner-burning natural gas.

Simplicity of Design and Operation
GTI Bi-Fuel Systems follow a design philosophy of simplicity. The system does not interface with the diesel control governor, but instead remains independent. This allows the diesel governor to react to changes in genset load without interference of the gas system. In this manner, the diesel LEADS, and the gas LAGS. This philosophy ensures safe engine operation with no compromise in the operation of either fuel system.

The GTI Bi-Fuel System is comprised of patented technologies that allow engines to safely operate on gas percentages up to a maximum of 70%* of the total fuel requirement. Engines converted to GTI Bi-Fuel exhibit diesel-like performance in such critical areas as efficiency, stability and load acceptance.

A key feature of the system is its ability to switch fuel modes without interruption in engine power output. The engine can be switched between diesel and gas automatically while maintaining speed and load. This feature gives the user the flexibility to choose between gas and diesel modes as dictated by fuel pricing, fuel availability or other operational considerations. An equally important feature is the ability to maintain engine power levels while operating in gas mode between the "continuous" and "prime" ratings of the engine. For operations above the programmed power limit, the engine is automatically switched to 100% diesel mode, thus avoiding the necessity to derate the engine.

The GTI Bi-Fuel System uses a state-of-the-art electronic control and monitoring system which monitors critical engine and bi-fuel system parameters and activates or deactivates gas mode according to programmed limits. When a monitored parameter exceeds the allowable limit, the controller switches the engine to 100% diesel mode and electronically logs the fault for diagnostic purposes. The control panel is CSA-approved for Class I, Division 2 environments.

Cost Savings
Displacing a percentage of diesel fuel with methane-based gas provides an immediate economic benefit based on the cost difference between the fuels and the amount of run time of the genset. In high usage gensets, the GTI System can pay for itself in a short period of time. Simple Excel-based spread sheets are available to assist in modeling the economic benefits of converting to GTI Bi-Fuel.

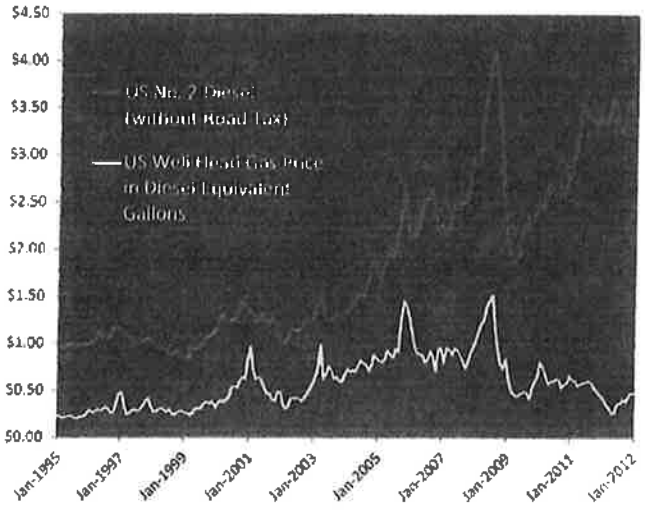

Increased Run Time
Reducing the amount of diesel fuel used extends the run time in proportion to the substitution rate, providing extra hours of operation in critical applications.

Simplified Logistics
The frequency of refueling is reduced, thereby lessening the costs and risks associated with hauling diesel fuel.

Reduced Liquid Fuel Storage
As environmental concerns about liquid fuel storage increases pressure on operators, using the GTI Bi-Fuel System offers some relief by reducing the volume of above-ground diesel fuel storage.

Emissions
Altronic has commissioned independent third party emissions testing of the GTI Bi-Fuel System on industry representative engines by EPA and CARB-certified laboratories to stringent industry testing standards and procedures. Results demonstrate conclusively that, when properly installed and commissioned on engines maintained to OEM standards, operation of the GTI Bi-Fuel System can result in a reduction of oxides of nitrogen (NOx), particulates (PM), non-methane hydrocarbons (NMHC), and carbon monoxide (CO).**

Flare Gas Reduction
Pressure to reduce the flaring of waste gases into the atmosphere continues to increase worldwide. The GTI-Bi-Fuel System allows these unwanted gases to be used as fuel for the generation of electrical power.

Flexible Fuel Rates
Gas suppliers offer discounted rates to customers who can tolerate supply interruptions in times of high demand/inadequate supply. GTI Bi-Fuel provides for this option since the genset can operate on 100% diesel at any time.

Bi-Fuel* is a registered trademark of ALTRONIC, LLC U.S. PATENTS 6,250,260 and 6,543,395

*Substitution rates can vary from 25% to 70%, subject to gas quality and other application conditions.

**Requires the use of a properly sized diesel oxidation catalyst (DOC). Altronic recommends the use of such DOC on all bi-fuel applications. Contact your local GTI Distributor for details.

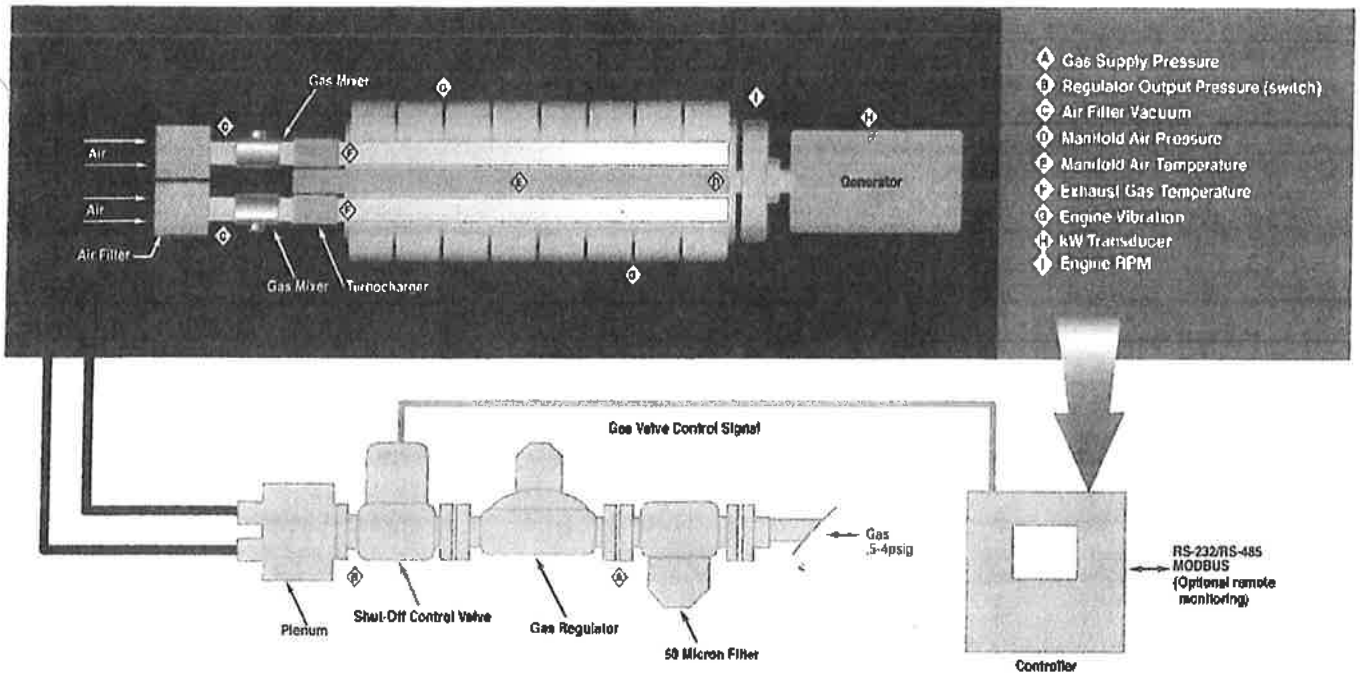

Reduced Capital Costs

Due to the higher power density of diesel engines relative to pure spark-ignited gas engines, the cost per kW produced of a diesel engine can be significantly less compared to the same output gas engine. GTI Bi-Fuel allows the user to enjoy many of the benefits of gas engine operation coupled with the lower capital cost of the initial purchase.

Operation and Performance

Gas is introduced downstream of the engine air cleaner and upstream of the turbocharger. The gas is supplied at approximately atmospheric pressure using a proprietary air-fuel mixer that allows for a high level of gas mixing with the least possible air restriction. The air-gas mixture is compressed in the turbocharger and distributed to each cylinder by the engine air-intake manifold. The lean air-gas mixture is compressed during the compression stroke of the piston and ignited by reduced diesel spray. Since the air-gas mixture is maintained in a lean condition, pre-ignition does not occur.

Flow of gas to the engine is load dependent and varies with combustion airflow changes. The Bi-Fuel System varies gas flow according to changes in the turbo intake signal. This allows it to respond to engine fuel requirements while maintaining the integrity of the OEM governing system. The standard GTI Bi-Fuel System incorporates a manually-adjustable power valve to control the gas substitution rate. Diesel injection is controlled by the OEM governing system during both gas and diesel modes.

The Bi-Fuel controller monitors various engine and system parameters such as manifold air pressure and temperature, exhaust gas temperature, intake vacuum, gas pressure and engine vibration. This information allows the controller to determine when to activate or deactivate bi-fuel operation depending on engine performance, load level, ambient temperature, knock limits or gas supply pressure levels. The controller can communicate with remote engine monitoring systems via RS-232/RS-485 connection (ASCII or MODBUS protocol).

Engine performance is on par with normal diesel levels. Heat rejection levels to the exhaust and water jacket systems are kept within normal operating parameters. Engine response to load variation is typically equal to, or better than, 100% diesel performance due to the unique design of the Bi-Fuel System and the associated combustion characteristics of the air-gas mixture. Similarly, engine load acceptance (for large block loads) meets or exceeds straight diesel performance.

Factory Trained and Certified Technicians

Altronic requires each GTI Master Distributor to have a factory certified technician on-staff. Altronic provides a rigorous training and on-engine audit program to its distributors to insure quality of installation and commissioning of the GTI Bi-Fuel System to provide proper system performance and engine safety to its customers.

GTI+ BI-FUEL® SYSTEM

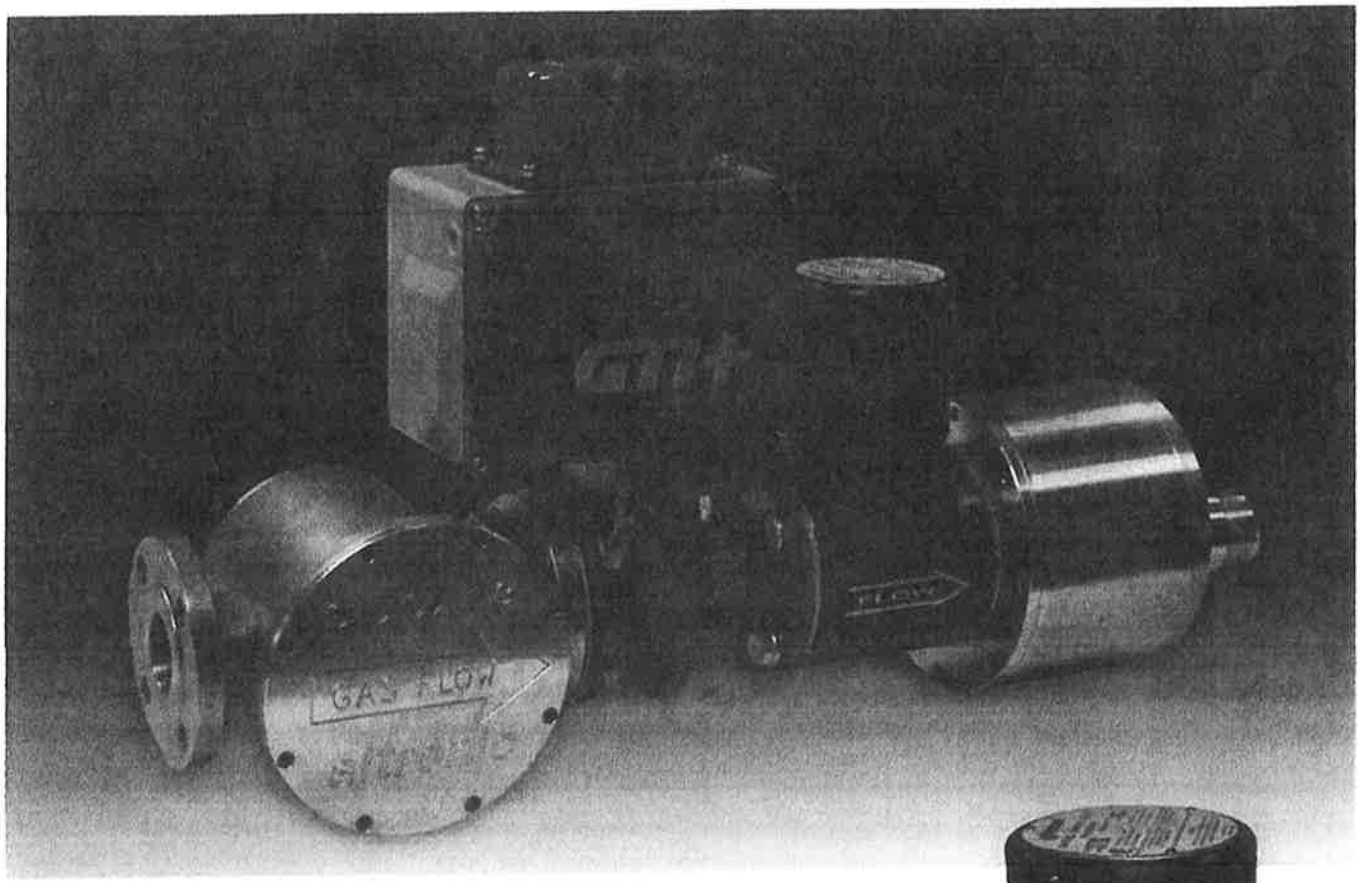

The GTI+ Bi-Fuel® System builds on the experience of over 3300 installed GTI Bi-Fuel Systems worldwide. The GTI+ platform offers improved performance through the use of an innovative new mixer design and fully electronic, closed-loop fuel control valve-based gas train. The design increases system responsiveness, reduces the degree of—and eliminates the effect of—any parasitic pressure drop between the gas train outlet and turbocharger inlet.

The GTI+ Bi-Fuel System maintains the basic design philosophy of the original GTI product line: Simplicity in design and operation, while maintaining a true zero-pressure "draw through" configuration that maximizes engine safety.

The GTI+ System is ideal for applications such as drilling rigs, where the optimal substitution rate needs to be mapped across the genset load range. The Altronic AGV5-2L valve combines the function of a closed-loop, electronic zero governor with that of a substitution control valve, providing a fast responding and reliable fuel control system.

Electronic Gas Train

The GTI+ System utilizes a fully electronic, advanced gas train design. At the heart of this system is a specialized version of the Altronic AGV5 fuel valve. The AGV5 is a microprocessor-based smart valve equipped with a fast-acting voice coil for rapid and accurate response. The AGV5 serves as both the zero governor pressure controller and fuel valve to control the bi-fuel substitution rate across the engine load range. The valve responds in closed-loop control to an electronic pressure signal within the

mixer housing, ensuring that the fuel demand at the mixer is satisfied at any given time and eliminating pressure droop associated with pneumatic pressure control systems. This closed-loop control minimizes the effects of pressure drops

GTI+ Bi-Fuel® System Operation and Performance

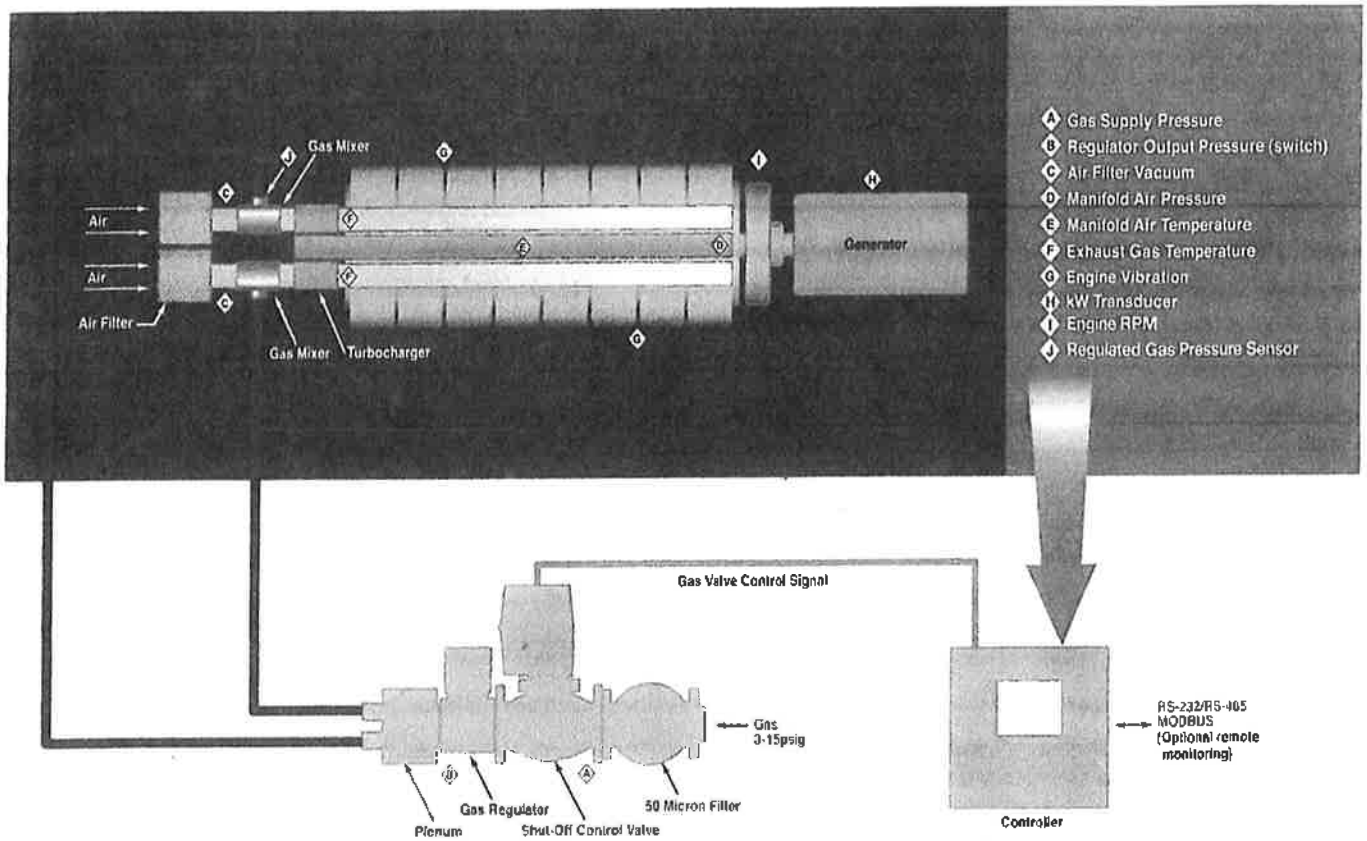

between the outlet of the gas train and the mixer inlet. This allows the desired substitution rates to be met while maintaining the fundamental safety characteristics of a zero pressure draw-through design.

The AGV5 is a proven design that has been used as the fuel control device in hundreds of gas engine applications. Its soft-seat poppet is highly tolerant of gas stream contamination and offers fail safe reliable service.

Since the AGV5 is rated to a higher pressure, the gas train can accept gas supply pressure of up to 50psig, eliminating the need to reduce higher gas supply pressures to lower gas train inlet pressures with an added primary regulator.

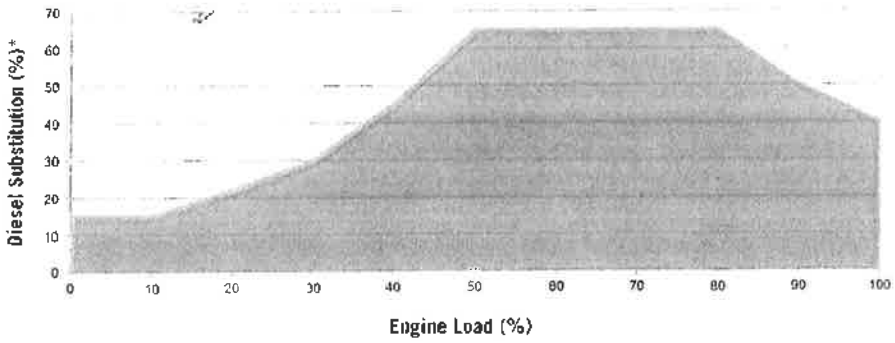

The new enhanced gas train also uses a highly-reliable, automatic, fast-acting, industrial shutoff valve to provide dual shutoff capability.

DE-3020 Controller Platform

The GTI+ Bi-Fuel System uses an upgraded DE control platform which provides for configurable I/O for increased flexibility in application across the broad expanse of diesel engines in use today.

*Diesel substitution rates can vary based on factors such as gas fuel quality, engine design and condition, engine load profile, ambient temperature, application etc. Altronic makes no guarantee of achievable substitution

Major System Components and Sub-systems

Air-Fuel Mixer

The GTI Bi-Fuel® System uses a proprietary air-gas mixing device that has been designed for optimum blending of natural gas and engine intake air. Mixing of air and gas is achieved using a sophisticated, fixed-venturi design that avoids the use of an efficiency-robbing throttle plate. The low restriction air-gas mixer ensures that adequate air-flow is maintained to the engine and that operating efficiencies are not compromised by installation of the device. The computer-aided-design mixer is built to aerospace tolerances using CNC machining processes and is assembled using state-of-the-art welding techniques. The finished mixer has no moving parts once installed in the engine air-intake system, and requires no routine maintenance.

Plenum

The plenum works in conjunction with the DN65, DN80, or GTI+ gas train and air-gas mixer to control the amount of gas supplied to the engine for a given engine load with very low restriction and pressure drop. The plenum consists of three main parts: inlet plenum plate, plenum barrel (chamber, hardware, and diffuser plate), and outlet plenum plate (1, 2, 4, and 6 outlet JIC hose connections). The plenum is constructed of CNC-machined aerospace quality aluminum, and mil-spec anodized for surface hardness and corrosion protection.

Gas Trains

Conditioning and regulating the natural gas prior to admission into the engine is a critical part of the GTI Bi-Fuel System. The system gas train includes a 50-micron fuel filter, an electrically-operated solenoid valve, actuated in the event of an emergency or for system shutdown, and a zero-pressure, demand-type gas pressure regulator—or, for the GTI+ System, a smart, fast-acting fuel control valve. This latter component reduces the inlet gas pressure to roughly atmospheric pressure.

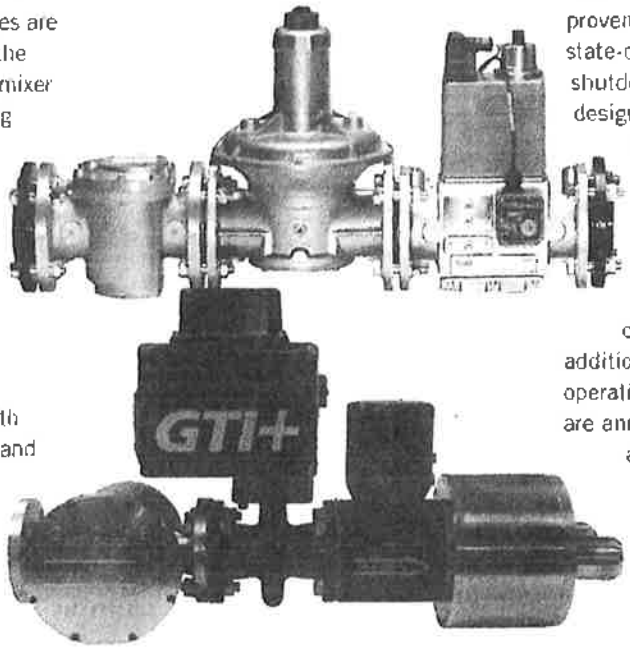

With a negative outlet pressure, the design allows the system to use a "demand" control scheme whereby engine intake airflow determines the gas flow of the engine. As engine load changes, corresponding changes in intake air volume automatically draw additional fuel into the mixer.

Engine Control System

The Engine Control System is based on proven Altronic controllers and provides state-of-the-art engine control and safety shutdown monitoring. The controller is designed specifically for the GTI Bi-Fuel System and is straight-forward and simple to operate. It monitors a number of pressure and temperature points and returns the engine to 100% diesel operation should any parameter deviate from its normal range. In addition, a hourmeter function tracks the operating hours in bi-fuel mode. Alarms are annunciated in clear message form and the controller maintains an alarm log of the last 100 events.

GTI Step Control System (STEPCON®)*

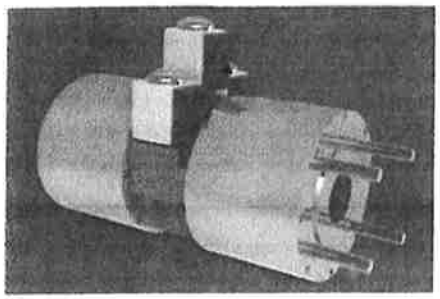

The STEPCON® System is an option to the basic GTI Bi-Fuel® System. STEPCON retains all of the components of the basic fumigation system with the addition of a Gas Control Manifold (GCM), kW sensor, and a panel upgrade with customized firmware and outputs.

The STEPCON enhances the standard bi-fuel system, allowing its application over a wider load range, adjusting the optimal substitution step based on load with the capability to make substitution level adjustments in response to rapid load changes.

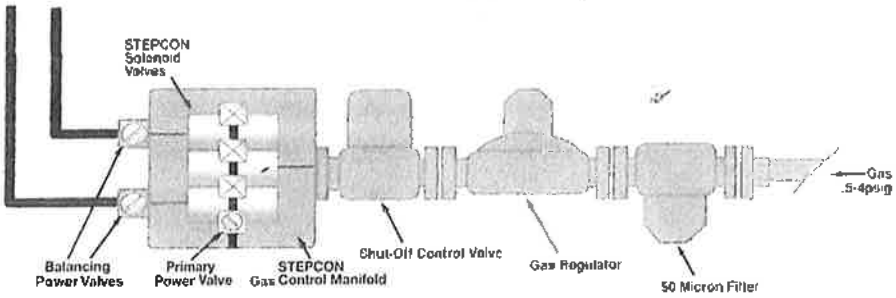

The design requires no modifications to the diesel engine, controls, or sensors, and uses all of the same basic safety systems to protect the engine. The STEPCON system incorporates a kW sensor to enhance its ability to sense engine load, and a gas control manifold (GCM) assembly, installed directly on the outlet side of the gas train. The GCM incorporates a standard manual power valve in parallel with three single-solenoid fuel control valves, each of which has a manually set, fully adjustable orifice that is set by the commissioning technician. A standard GTI Bi-Fuel commissioning procedure is performed for the load window where the lowest level of substitution will take place, with all three solenoid valves electrically closed, using only the manual power valve to set this lowest (initial) level of substitution. The commissioning procedure is repeated for the second, third, and fourth stepped levels of substitution, each time setting the percent of substitution for its corresponding load window by adjusting the variable orifice of each solenoid valve. Customized software is used to create ON/OFF combinations of the three solenoid valves in the gas control manifold to "shape" the gas substitution curve to follow the engines tolerance to gas as engine load is varied across a wide range, providing optimized substitution over a wide load band. The result is a load map that allows the GTI control panel to rapidly transition to the selected valve combinations based on engine load, thus maximizing the benefits of the bi-fuel application.

STEPCON Applications

The STEPCON System is intended for use in applications where there is a need to accommodate adjustments in the optimal substitution rate as a result of changes in conditions that would normally require a limitation to the maximum possible substitution over a given load window; or a limitation to the maximum possible load window with a given rate of substitution. An example would be an installation where high operating temperatures (either time-of-day or load related) limit the substitution at elevated loads. Another example is a genset that spends a large percentage of its time at light load, below the point where a standard bi-fuel system—optimized to operate in the engine's moderate-to-heavy load region—would be in the bi-fuel OFF condition (such as on a drill rig).

STEPCON Sizing

The STEPCON system is available in a number of models to accommodate various engine configurations.

STEPCON Fuel Control Manifold Size Chart

GCM	Inlet Flange	Outlet Size	Outlets
STEP65115	DN65	1.5" JIC	1
STEP65215	DN65	1.5" JIC	2
STEP65415	DN65	1.5" JIC	4
STEP80120	DN80	2.0" JIC	1
STEP80220	DN80	2.0" JIC	2
STEP80420	DN80	2.0" JIC	4

Experience You Can Count On

Altronic began the promotion and sale of the GTI Bi-Fuel System in 2002, long before most genset operators had heard of such application, or before many had enjoyed the benefits that it offers. Since then thousands of systems have been installed throughout the world in a wide range of applications and operating environments. A dedicated network of independent Master Distributors and Dealers, fully supported by Altronic, offers local installation, commissioning and maintenance.

*Patent Pending

Bi-Fuel® Kit Application and Contents

GTI Series	Engine Power Rating	Engine Type	Gas Mixers[1]	Series No.	Vibration Sensor(s)	STEPCON Option	CSA Certified[2]
25[3]	Up to 75 kWe	In-line engine	1 x 3"	2513	NA	NA	No
	75-150 kWe	In-line engine	1 x 4"	2514	NA	NA	No
				2514	Optional (1)	NA	No
50	75-150 kWe	In-line engine	1 x 4"	5014	NA	NA	No
				5014	Optional (1)	NA	Yes
	150-300 kWe	In-line engine	1 x 5"	5015	NA	NA	No
				5015	Optional (1)	NA	Yes
65	300-600 kWe	In-line engine	1 x 6"	6516	Standard (2)	Optional	Yes
	600-1200 kWe	V-engine, common manifold	2 x 6"	6526	Standard (2)	Optional	Yes
			4 x 6"	6546			
		V-engine, dual manifold	2 x 6"	6526			
			4 x 6"	6546			
		V-engine, quad manifold	2 x 6"	6526			
			4 x 6"	6546			
80	1200-3000 kWe	V-engine, common manifold	2 x 7"	8027	Standard (2)	Optional	Yes
			4 x 6"	8046			
			4 x 7"	8047			
		V-engine, dual manifold	2 x 7"	8027			
			4 x 6"	8046			
			4 x 7"	8047			
		V-engine, quad manifold	2 x 7"	8027			
			4 x 6"	8046			
			4 x 7"	8047			
GTI+	Up to 1.2MW[4]	In-line or V-engine, single, dual or quad manifold	Size and quantity as required	GTI+	Standard (2)	NA	Yes

1 Mixer sizes can be incorporated as required by engine air inlet piping size.
2 CSA Certified Class I, Div. 2, Group D System available. Contact a GTI Authorized Distributor for details.
3 Series 25 kits require 12Vdc Power; all other Series require 24Vdc power.
4 At 3psi supply pressure. Contact your distributor for larger applications.

C US

NEMA 4X

altronic
www.gti-altronic.com

HOERBIGER
Altronic, LLC – A Member of the HOERBIGER Group

712 Trumbull Avenue
Girard, Ohio 44420 USA
P: 330-545-9768
F: 330-545-3231

GTI TECHNICAL BULLETIN

GTI TB 100 OCTOBER 13, 2014

GTI EMISSIONS TEST RESULTS

As part of the process of obtaining aftermarket certification of the GTI Bi-Fuel® system with the Air Resources Board of the State of California (CARB), Altronic commissioned extensive emissions testing of the GTI system with two CARB approved, independent, third-party emissions test laboratories. These tests were conducted to ISO 8178 using stringent CARB and EPA standards and procedures. Following initial set up, Altronic and its representatives were not permitted to tamper with the system through a specified 125-hour continuous run period in bi-fuel operation and during the emissions sampling period immediately following. At the conclusion of the test period, the data was processed and submitted to CARB, independent of Altronic.

The results below illustrate the emissions from the two sample engines in both the 100% diesel baseline test and bi-fuel operation in the weighted average 5-mode test specified by ISO 8178. The results demonstrate a clear reduction in regulated emissions (NOx+NMHC, CO and PM) against both the baseline test and against EPA and CARB standards for these engines.

A copy of the GTI CARB certification containing these results is available upon request or it can be obtained directly from the CARB website.

MTU18V2000 - Tier II

g/kW-hr (weighted average)		NOx + NMHC	CO	PM	NOx	NMHC	CO2
EPA Standard		6.40	3.50	0.20			
CARB Cert		5.50	1.60	0.16			
Diesel Baseline		5.57	1.10	0.18	5.30	0.27	773.80
Bi-Fuel Operation	with DOC	3.62	0.30	0.11	3.50	0.12	578.60
Reduction in Bi-Fuel Mode		35.0%	72.7%	38.9%			25.20%

Weighted average of 5-mode test conducted to ISO 8178
Tests conducted by CARB approved third party

Detroit Diesel Series 60 - Tier III

g/kW-hr (weighted average)		NOx + NMHC	CO	PM	NOx	NMHC
EPA Standard		4.00	3.50	0.20		
CARB Standard		4.00	3.50	0.20		
CARB Cert		3.80	1.10	0.18		
Bi-Fuel Operation	with DOC	3.78	0.06	0.07	2.90	0.88
Reduction in Bi-Fuel Mode		0.5%	94.5%	60.0%		

Weighted average of 5-mode test conducted to ISO 8178
Tests conducted by CARB approved third party

CARB does not certify the GTI Bi-Fuel® system as an emissions reduction product.
CARB Certification does not represent a product endorsement.

Certified Emissions Test: MTU 12V1600 (600kW)

	Carbon Monoxide (CO) Test			
% Load	25	50	75	
Diesel Baseline	1.6	0.8	.8	
Bi-Fuel w/o Catalyst	23.5	14.7	12.5	Over 100% Reduction
Bi-Fuel w/ Catalyst	0	0	0.1	
	Oxides of Nitrogen (NOx)			
Diesel Baseline	5.4	5.1	5.1	
Bi-Fuel w/o Catalyst	4	3.2	3.4	38.2% Reduction
Bi-Fuel w/ Catalyst	4.2	3.5	3.7	32.7% Reduction
	Particulate (PM)			
Diesel Baseline	0.19	0.15	0.16	
Bi-Fuel w/o Catalyst	0.12	.014	0.07	56.3% Reduction
Bi-Fuel w/ Catalyst	0.09	0.11	0.05	68.8% Reduction

altronic
GTI Bi-Fuel